

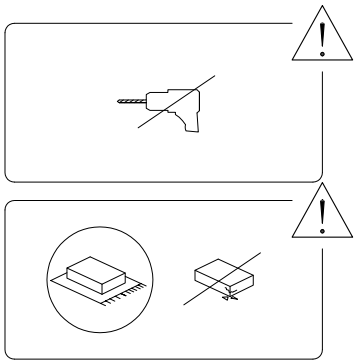


20'


1





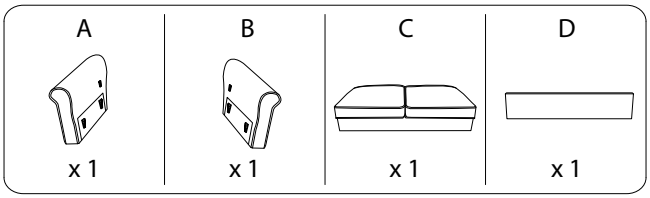
A
x 1
B
x 1
C
x 1
D
x 1

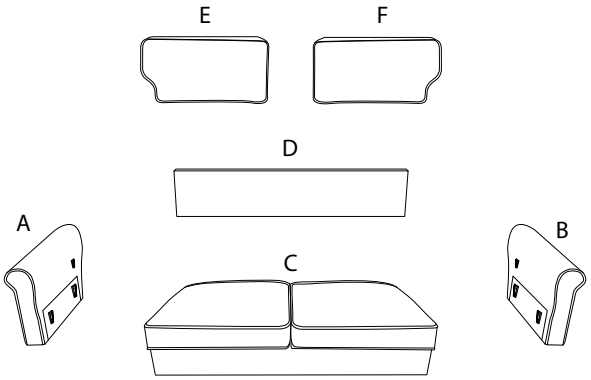
E
F
D
A
B
C

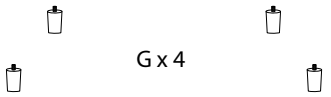
G x 4

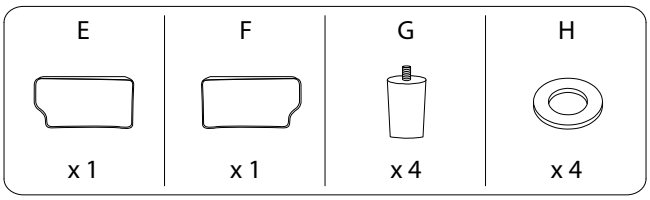
E
x 1
F
x 1
G
x 4
H
x 4





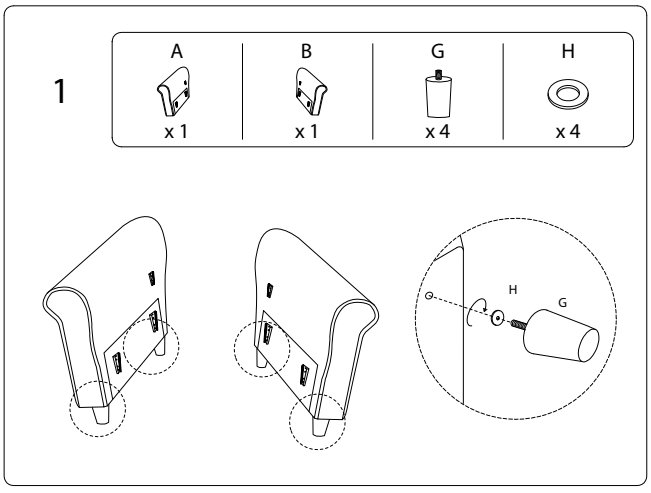
1
A
x 1
B
x 1
G
x 4
H
x 4
H
G

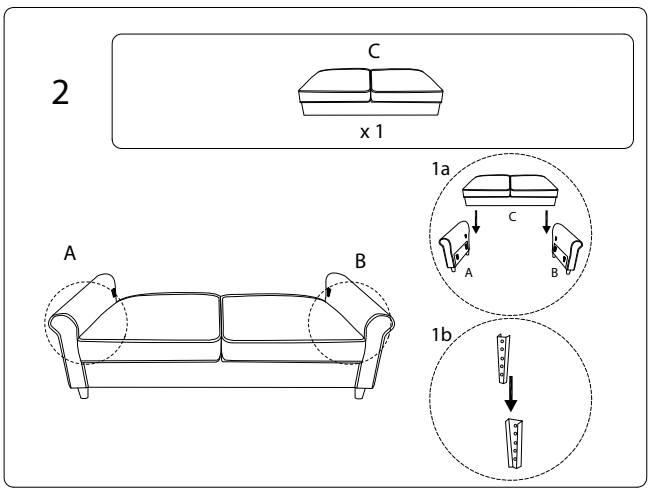
2
C
x 1
1a
C
A
B
A
B
1b





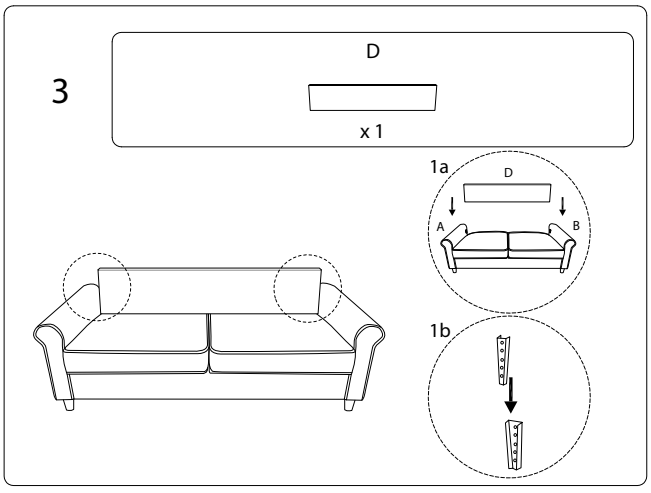
3
D
x 1
1a
D
A
B
1b

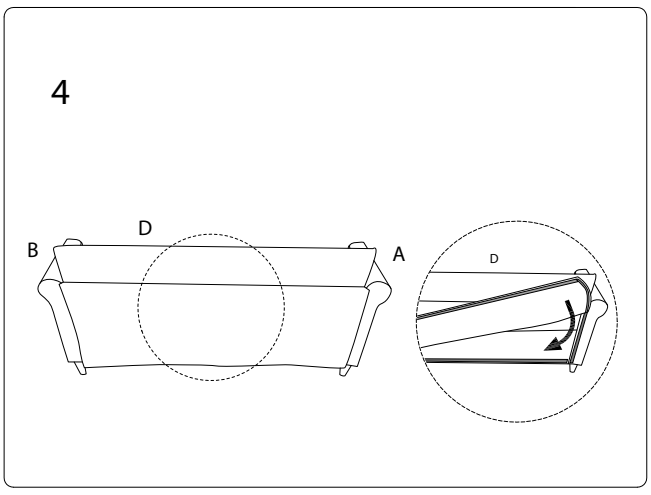
4
B
D
A
D

5

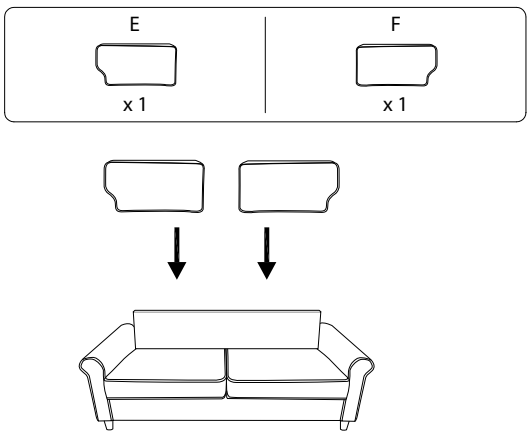






590/RONNEBY.3S/230420/