SELAH

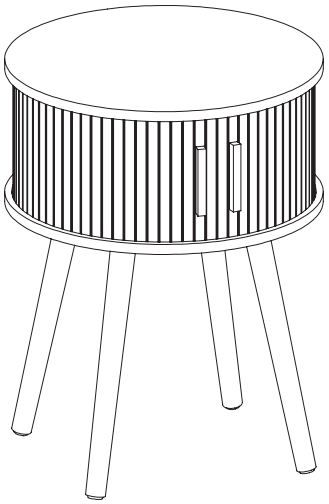

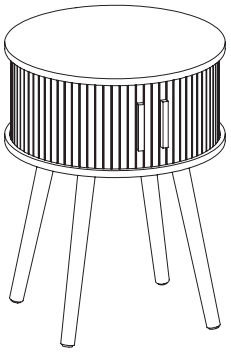

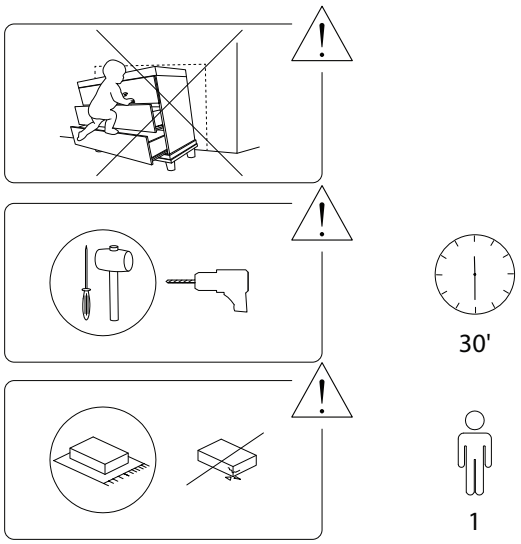

1	2	3	4
x 1	x 1	x 1	x 1

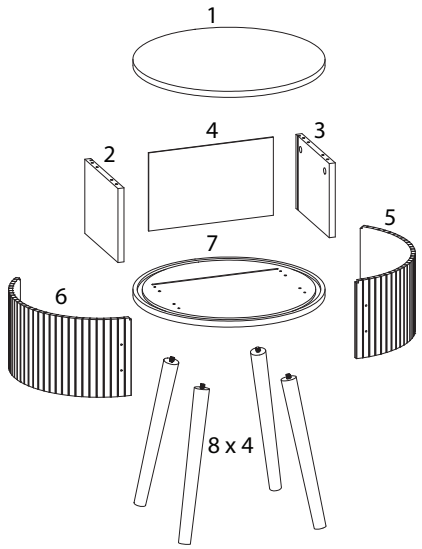

5	6	7	8
x 1	x 1	x 1	x 4

A	B	C
x 4	x 4	x 8
D	E	F
M4 x 40	M4 x 12	
x 4	x 21	x 4
G	H	I
	M4 x 25	
x 2	x 4	x 4
J	K	L
		M4 x 35
x 1	x 1	x 1

1

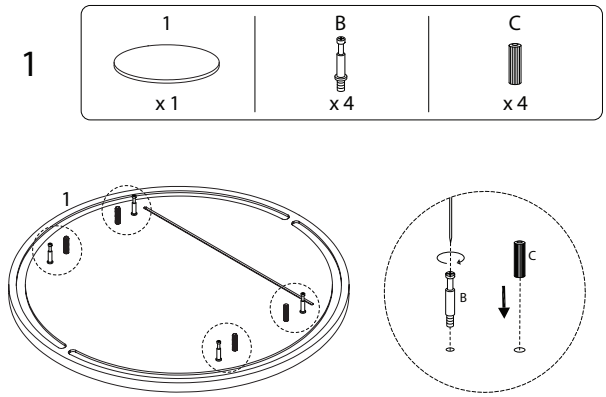
1
x 1
B
x 4
C
x 4
1
B
C

2

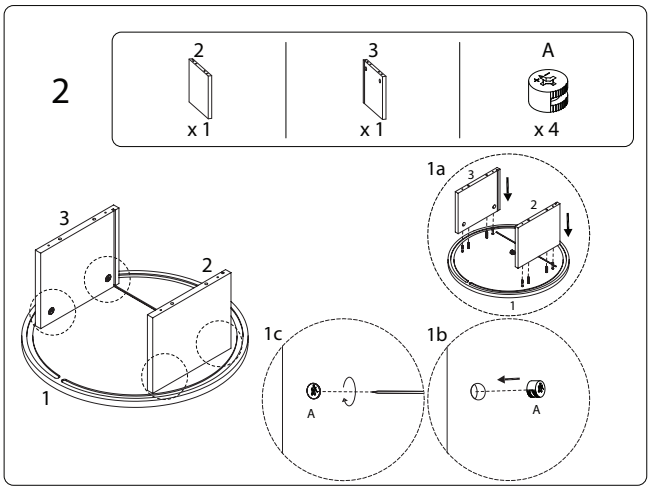
2
x 1
3
x 1
A
x 4
3
2
1
1a
3
2
1
1c
A
1b
A

3

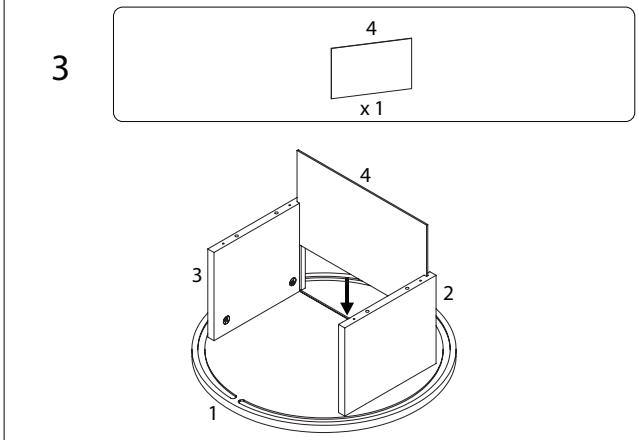
4
x 1
4
3
2
1

4

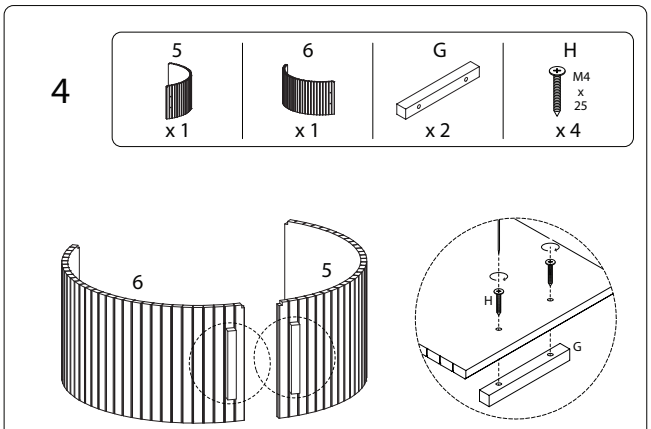
5
x 1
6
x 1
G
x 2
H
M4
x
25
x 4
6
5
H
G

5

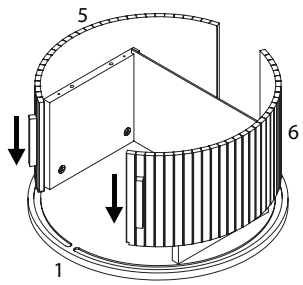
5
6
1

6

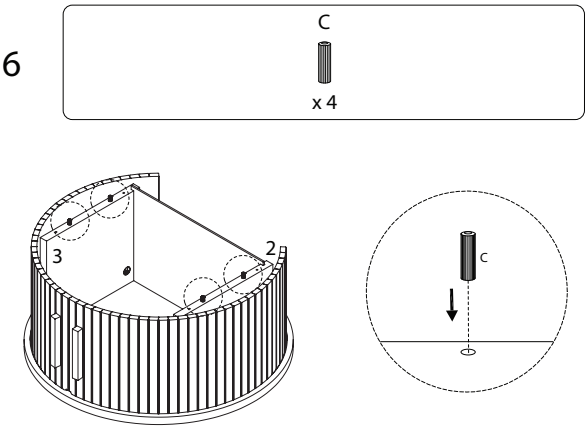
C
x 4
3
2
C

7

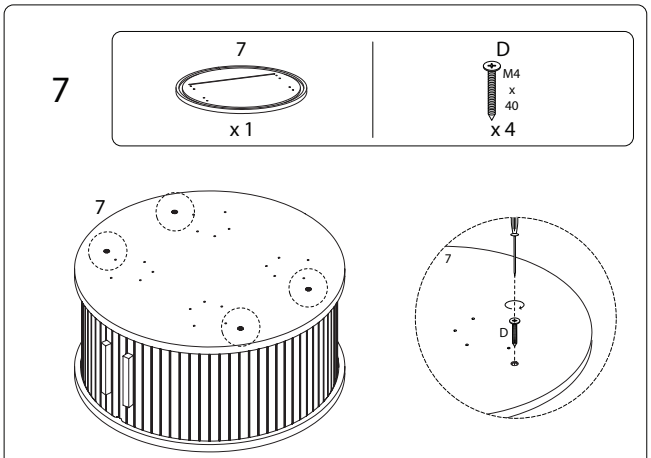
7
x 1
D
M4
x
40
x 4
7
7
D

8

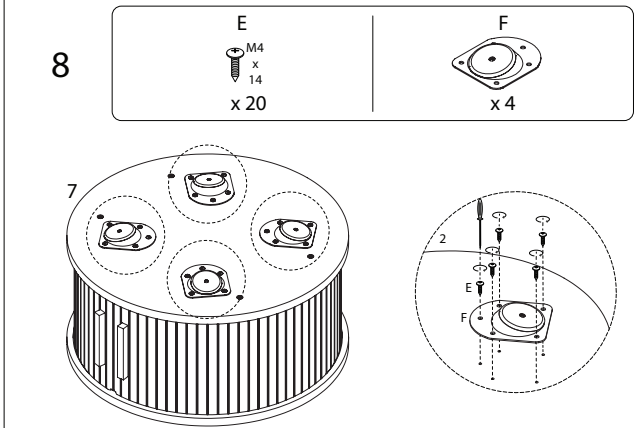
E
M4
x
14
x 20
F
x 4
7
2
E
F

9 x 4

8
x 1

I
x 1



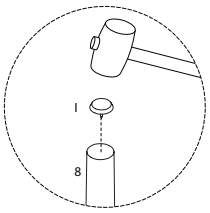

10

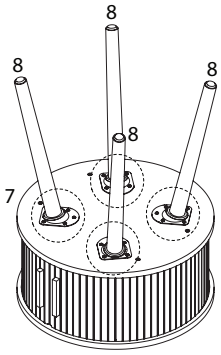

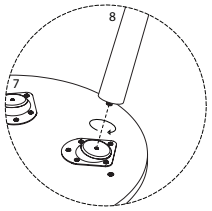

688/SELAH/300724/

11

F
M4
x
12
x 1

J
x 1

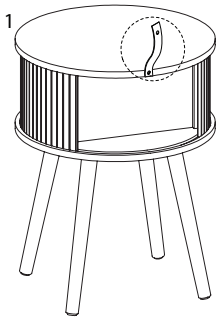

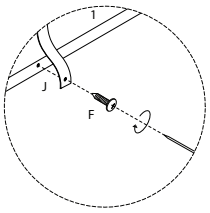

13

K
x 1

L
M4
x
35
x 1

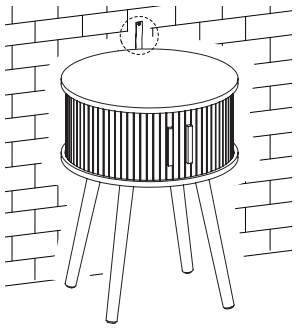

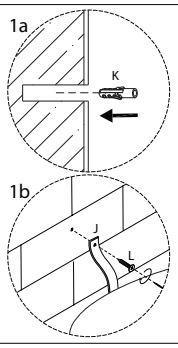

688/SELAH/300724/