ASSEMBLY INSTRUCTIONS

<<Before assembling,check all the hardwares and panels>>

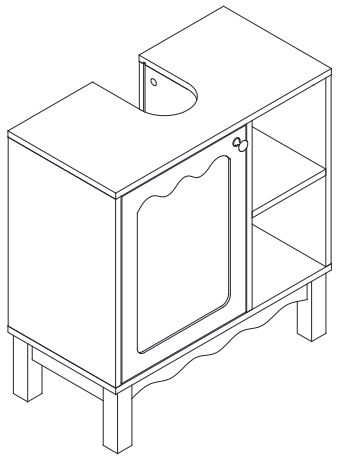

Hardware:

Letter	Piece	Number	Letter	Piece	Number
A	6x30mm	30pcs	G	4x16mm	1pc
B	6x35mm	26pcs	H	3x14mm	8sets
C	15x9.5mm	26pcs	I		1pc
D		1pc	J		2pcs
E	3x12mm	2pcs	K	4x14mm	12pcs
F	4x35mm	6pcs			

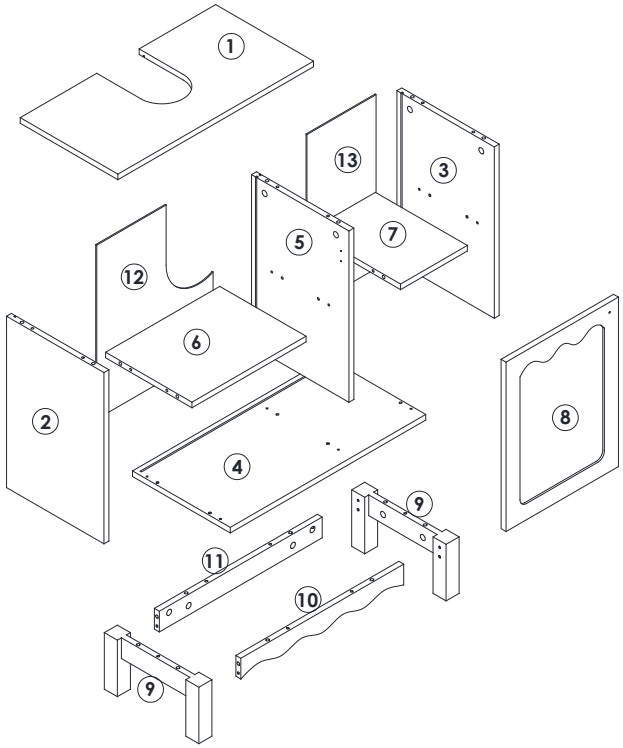

①

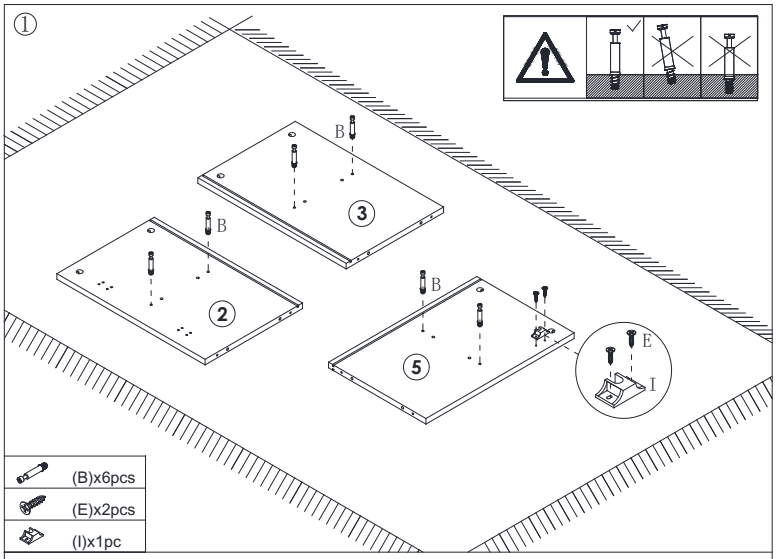

(B)x6pcs
(E)x2pcs
(I)x1pc

②

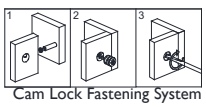

Cam Lock Fastening System

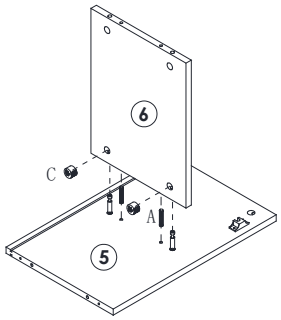

(A)x2pcs
(C)x2pcs

③

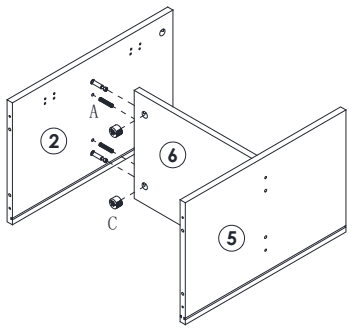

(A)x2pcs
(C)x2pcs

④

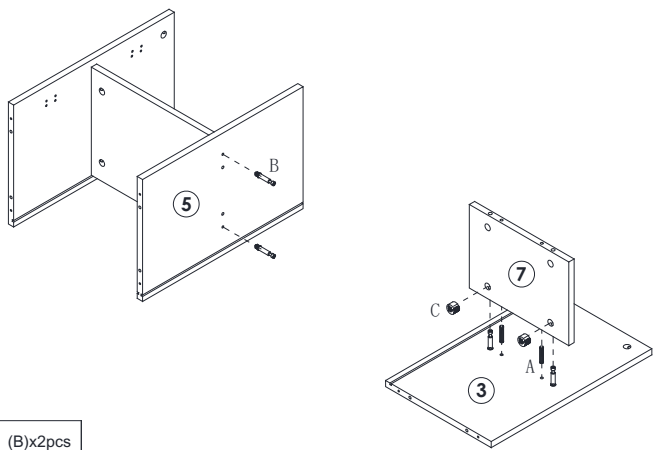

(B)x2pcs
(A)x2pcs
(C)x2pcs

⑤

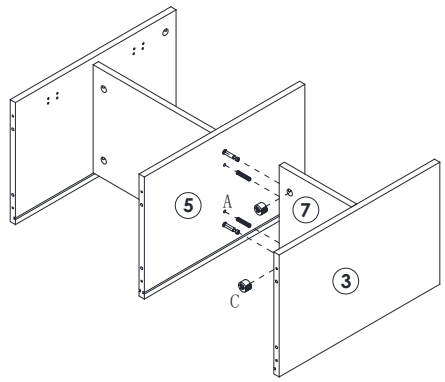

(A)x2pcs
(C)x2pcs

⑦

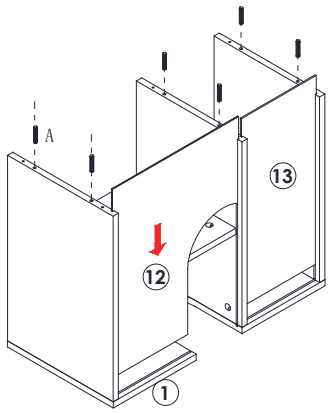

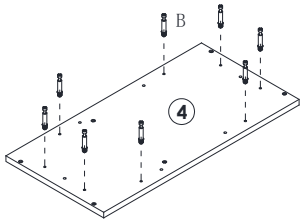

(A)x6pcs
(B)x8pcs

⑥

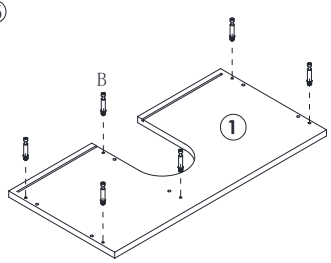

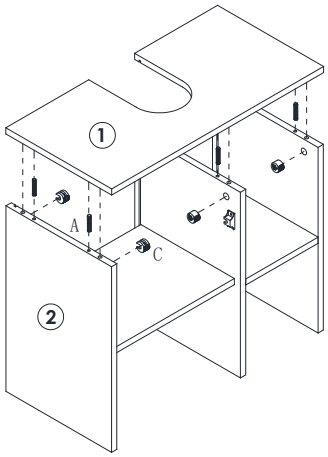

(B)x6pcs
(A)x6pcs
(C)x6pcs

5

⑧

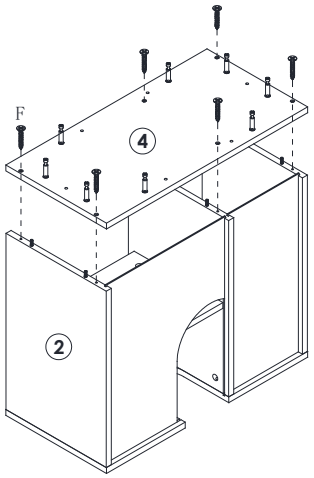

(F)x6pcs

6

⑨

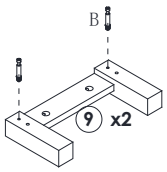

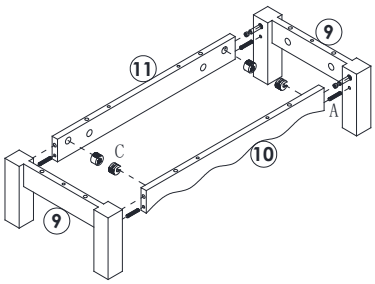

(B)x4pcs
(A)x4pcs
(C)x4pcs

⑩

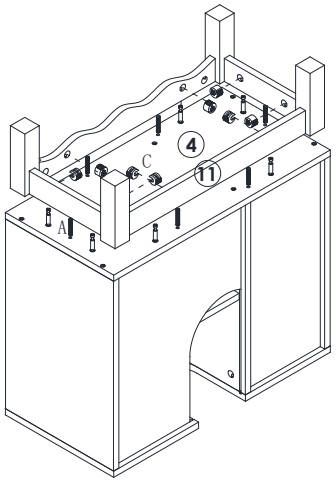

(A)x6pcs
(C)x8pcs

7

⑪

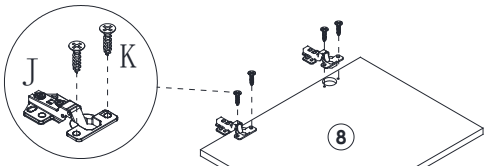

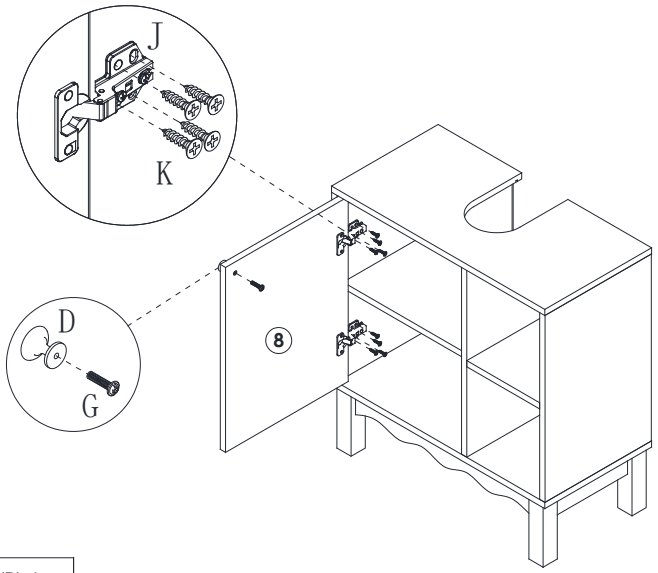

(D)x1pc
(G)x1pc
(J)x2pcs
(K)x12pcs

8

⑫

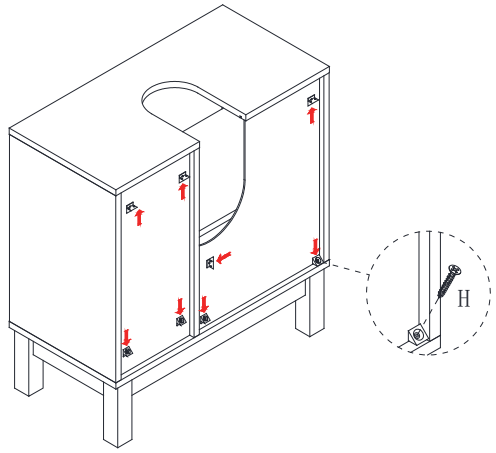

(H)x8sets

⑬

