MATANE





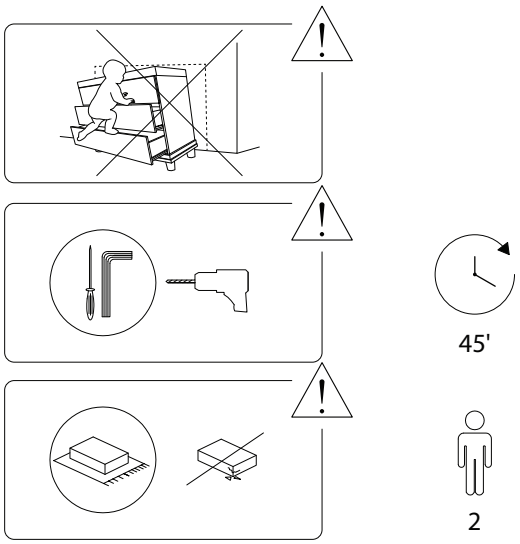
45'
2

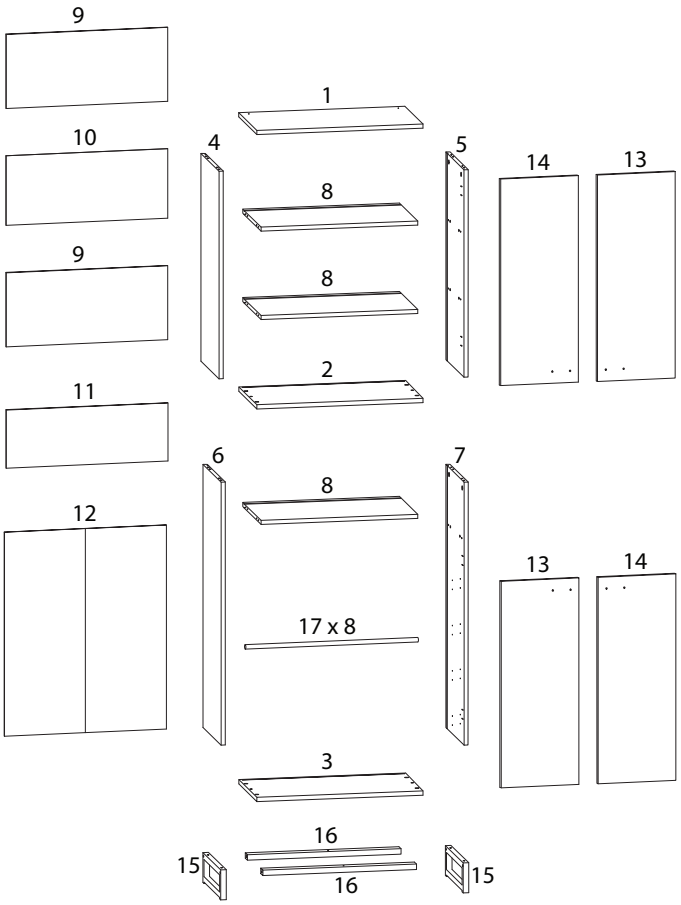
9
10
9
11
12
1
4
8
8
2
5
14
13
6
8
17 x 8
7
13
14
3
16
15
16
15

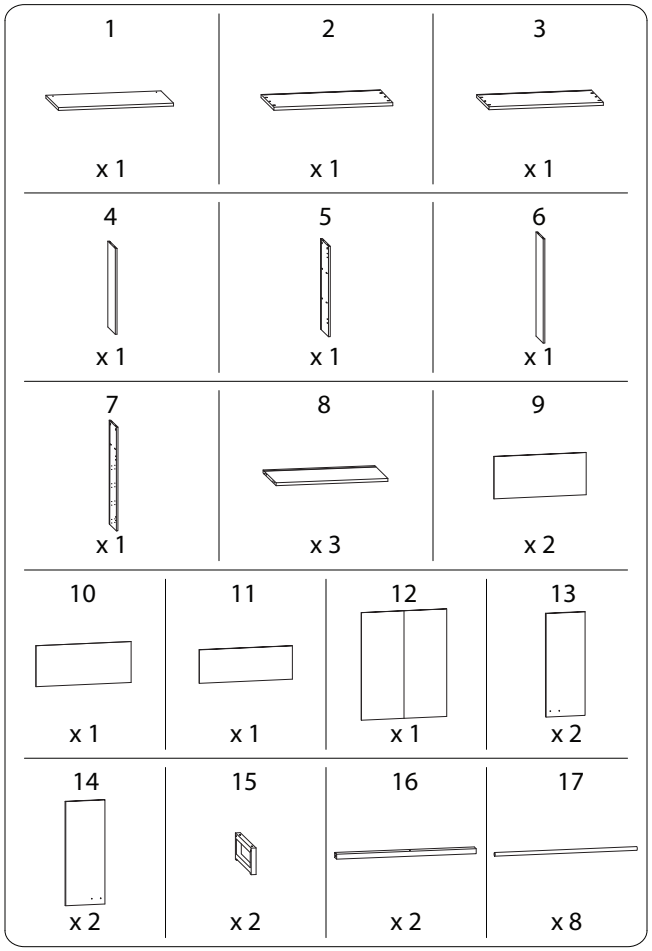
1
x 1
2
x 1
3
x 1
4
x 1
5
x 1
6
x 1
7
x 1
8
x 3
9
x 2
10
x 1
11
x 1
12
x 1
13
x 2
14
x 2
15
x 2
16
x 2
17
x 8

A	B	C
		
x 20	x 20	x 24
D	**E**	**F**
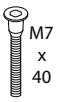 M7 x 40	 M3.5 x 14	 M6 x 40
x 8	x 80	x 4
G	**H**	**I1**	**I2**
 M6 x 30		 M3.5 x 14	
x 6	x 4	x 20	x 20
J	**K**	**L1**	**L2**
	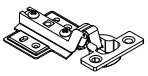		 M4 x 35
x 1	x 8	x 2	x 2
L3	**L4**	**M**	**N**
 M3.5 x 12			 M4 x 18
x 2	x 2	x 16	x 8

1

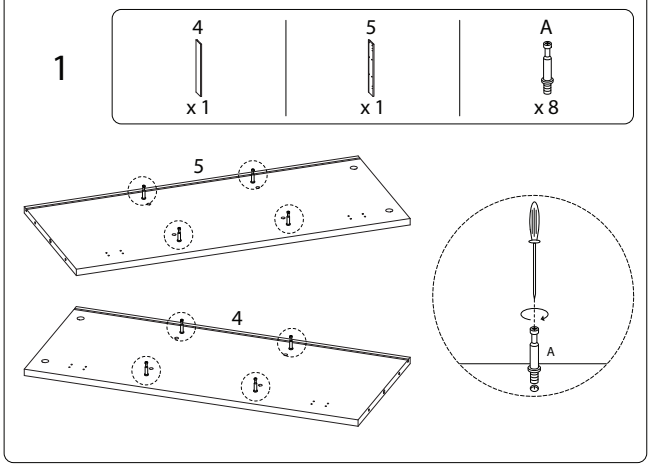

2 x 3

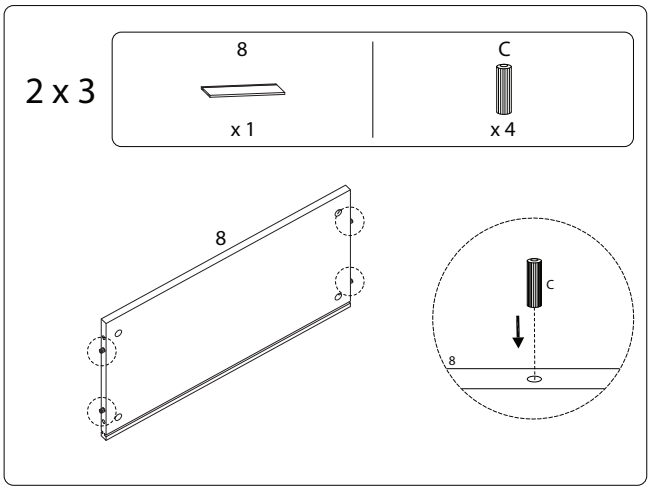

3

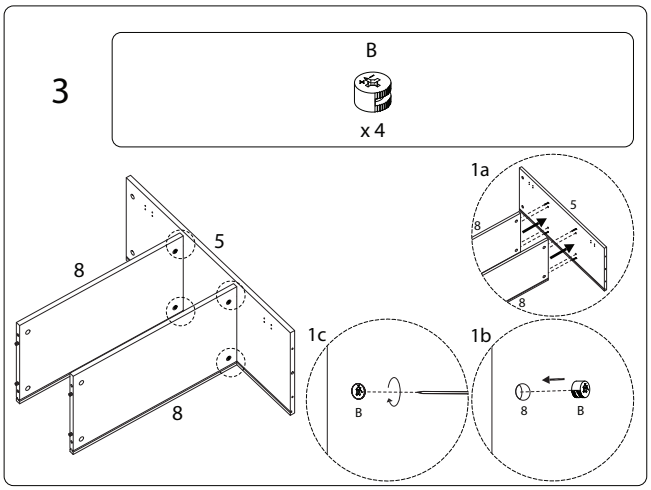

5

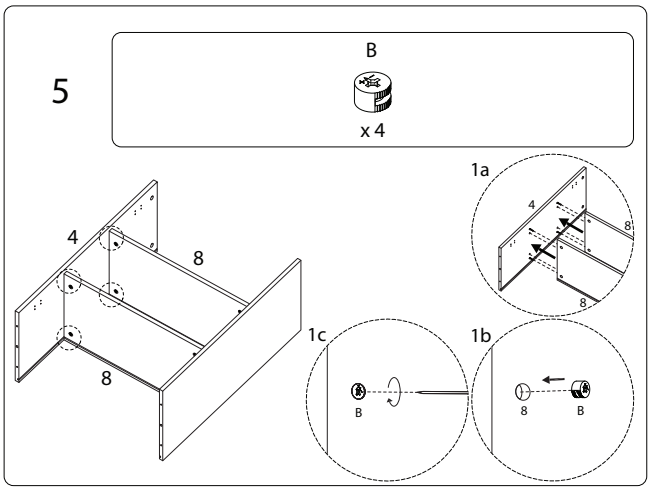

4

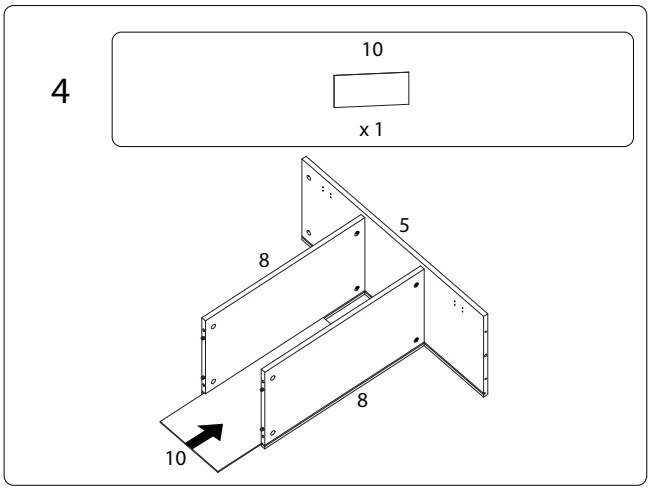

6

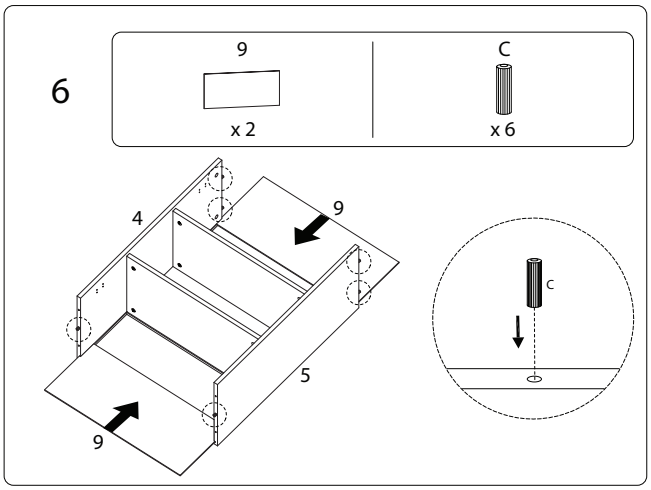

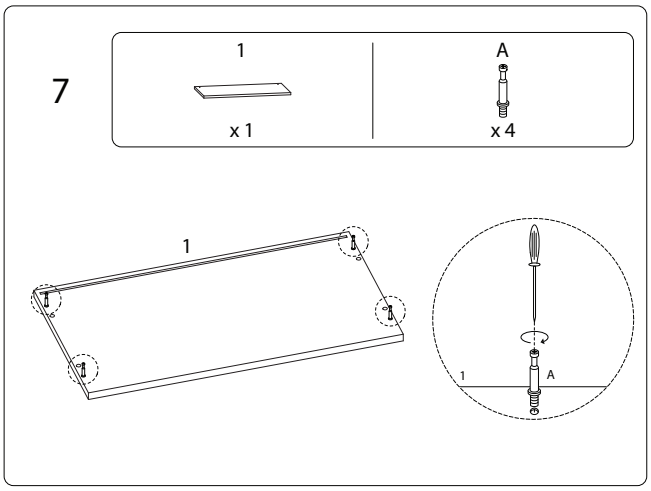
7
1
x 1
A
x 4
1
1
A

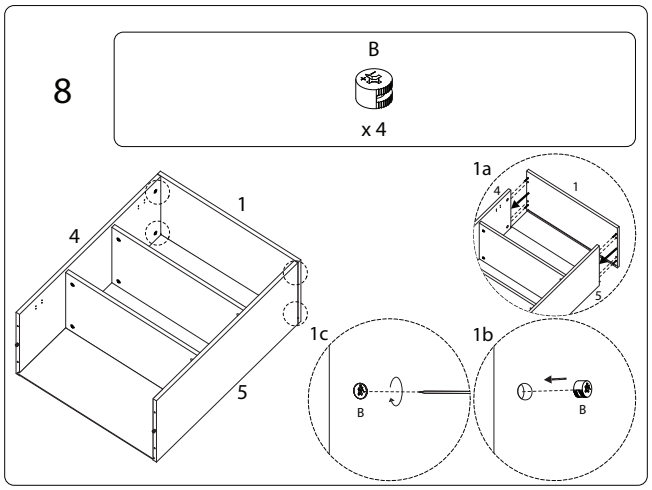
8
B
x 4
1a
1
4
5
1c
1b
B
B

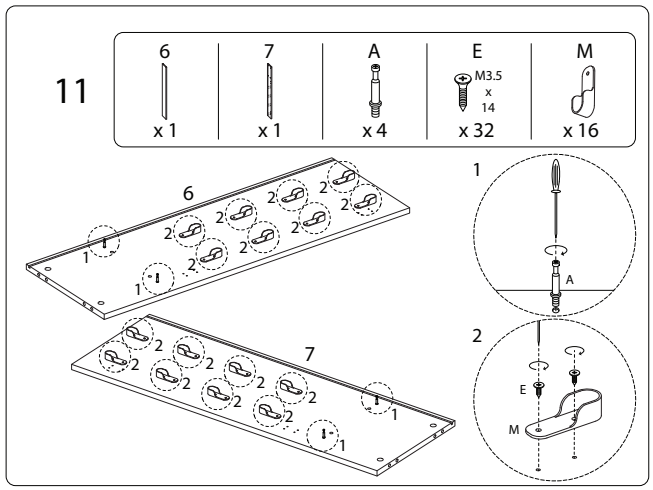
11
6
x 1
7
x 1
A
x 4
E
M3.5
x
14
x 32
M
x 16
6
7
1
A
2
E
M

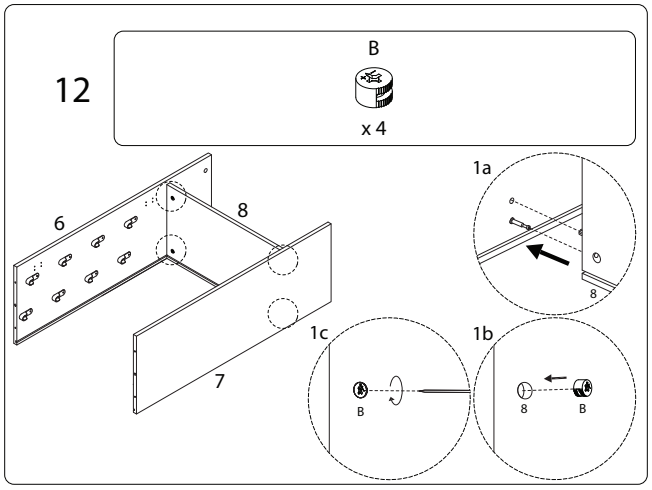
12
B
x 4
1a
6
8
7
1c
1b
B
8
B

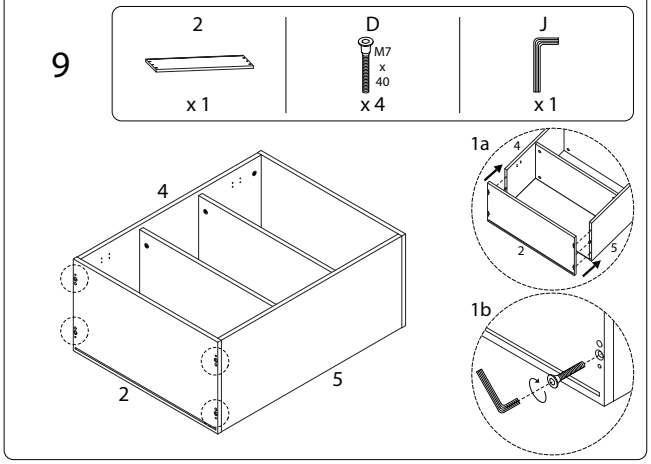
9
2
x 1
D
M7
x
40
x 4
J
x 1
1a
4
2
5
1b
4
2
5

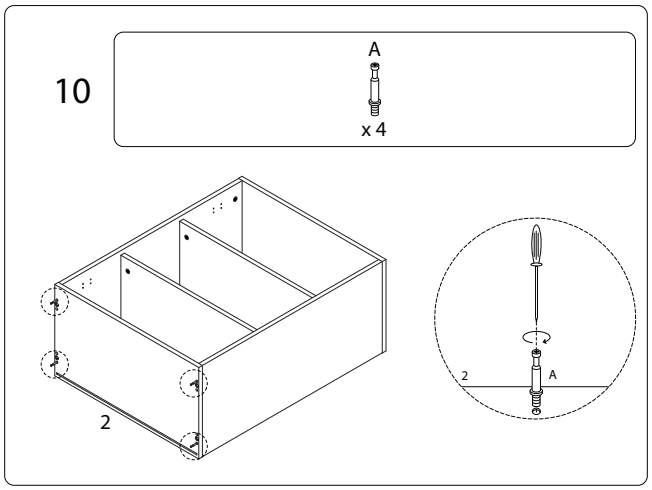
10
A
x 4
2
2
A

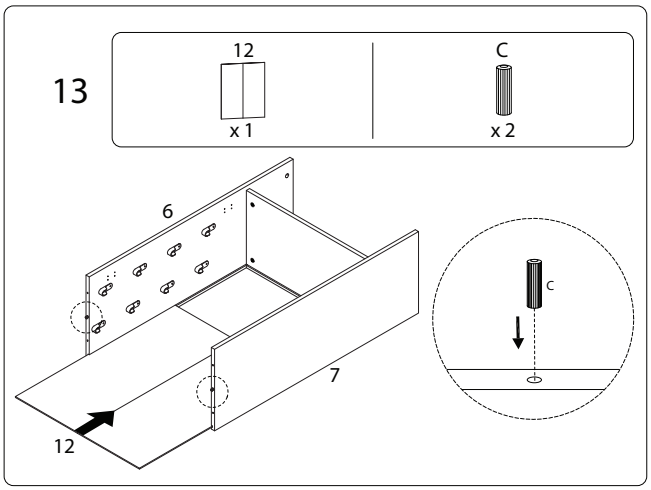
13
12
x 1
C
x 2
6
7
12
C

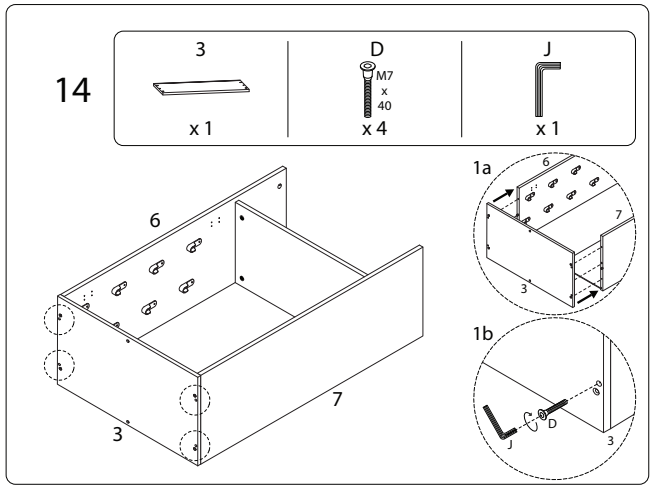
14
3
x 1
D
M7
x
40
x 4
J
x 1
1a
6
7
3
1b
6
7
3
D
J
3

15

11 x 1

C x 4

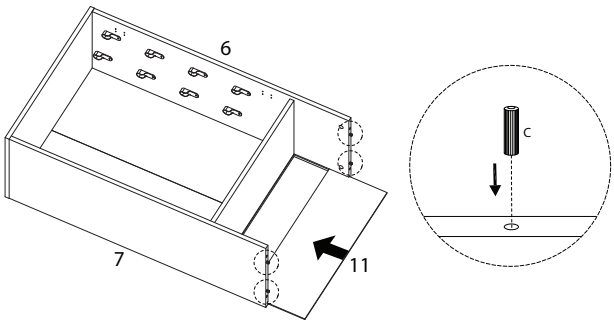

16

B x 4

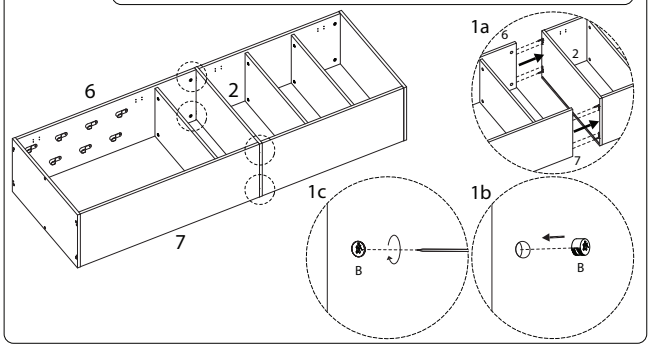

17

15 x 2

16 x 2

F M6 x 40 x 4

J x 1

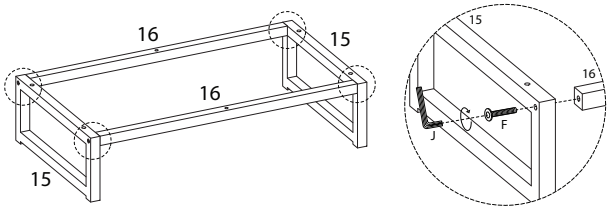

18

G M6 x 30 x 6

J x 1

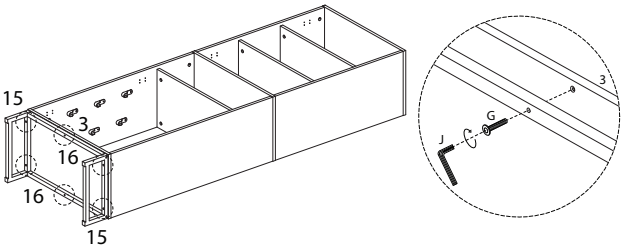

19 x 2

13 x 1

14 x 1

H x 2

N M4 x 18 x 4

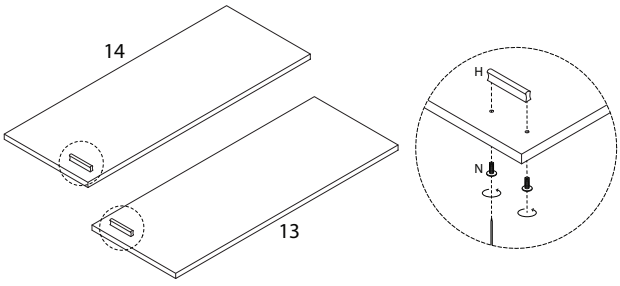

20 x 2

E M3.5 x 14 x 8

K x 4

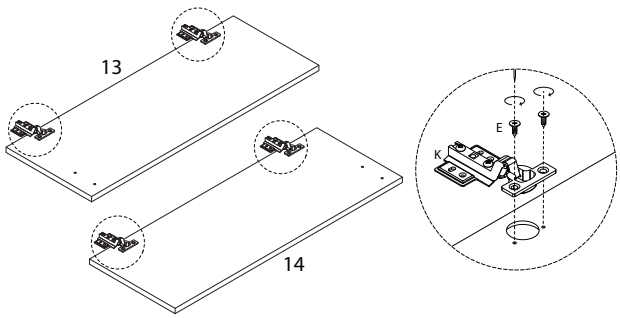

21

E M3.5 x 14 x 32

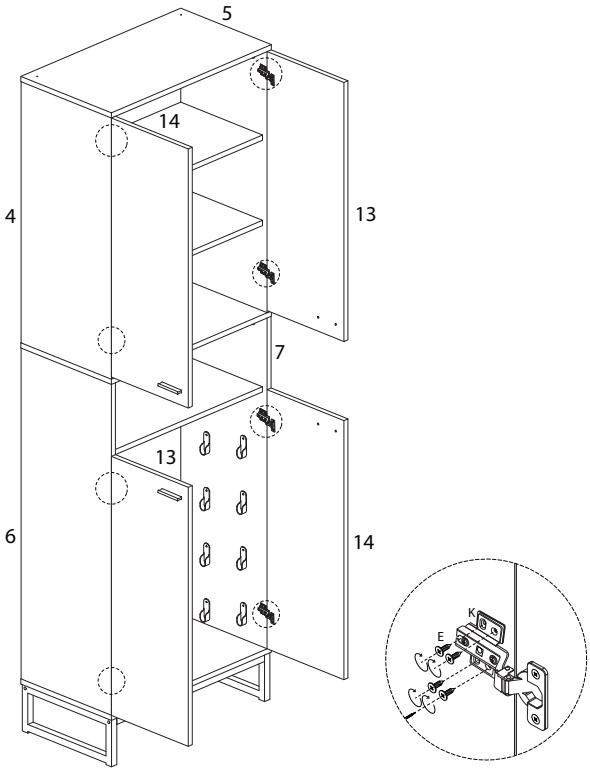

!

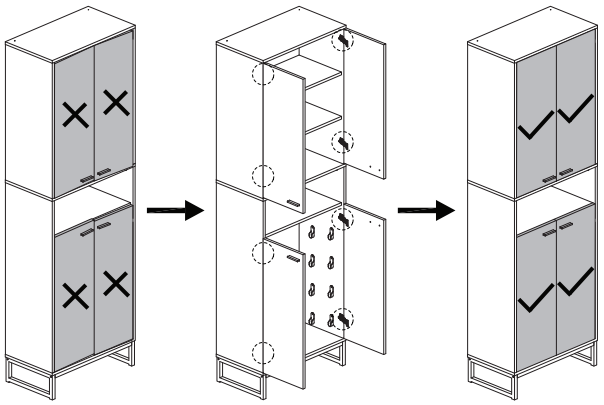

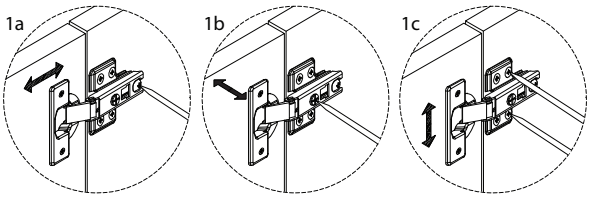

22

17

x 8

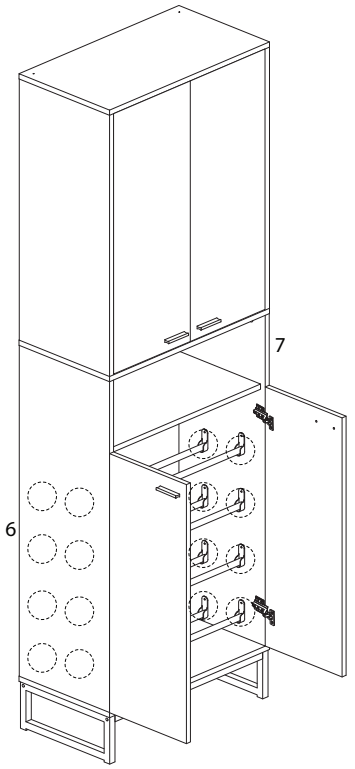

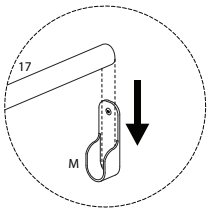

23

I1	I2
M3.5 x 14	
x 20	x 20

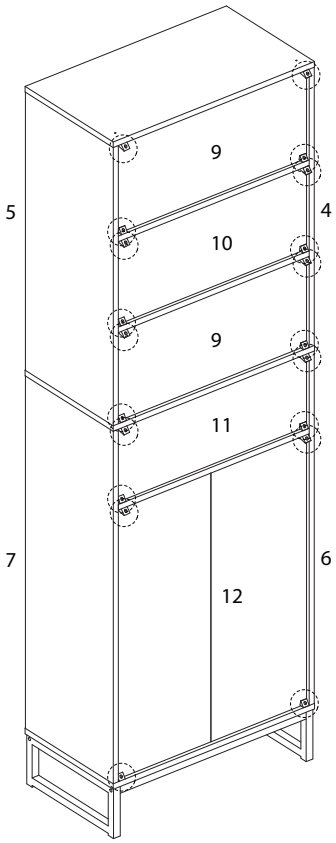

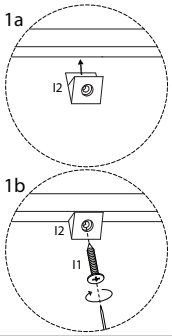

24

L1	L2	L3	L4
	M4 x 35	M3.5 x 12	
x 2	x 2	x 2	x 4

