RONDANE

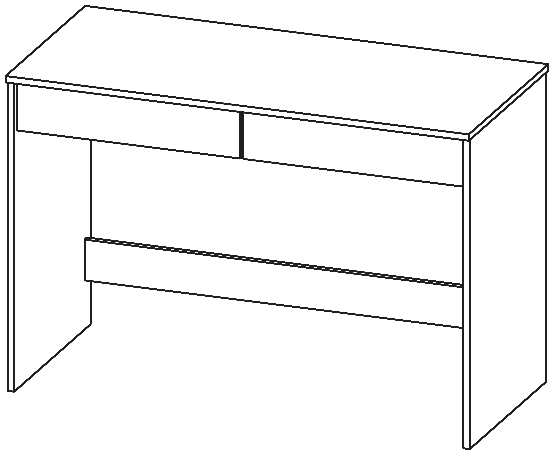

1/12

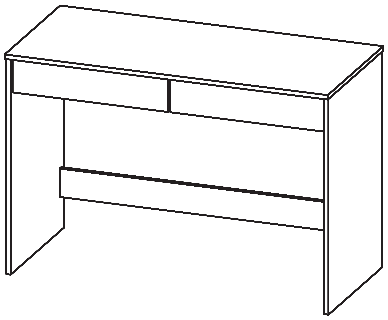

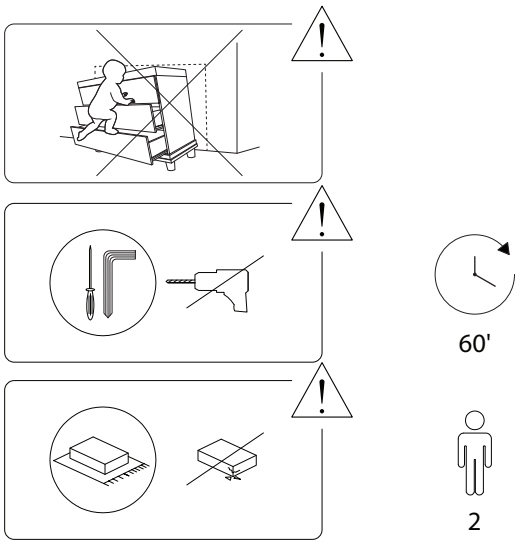

2/12

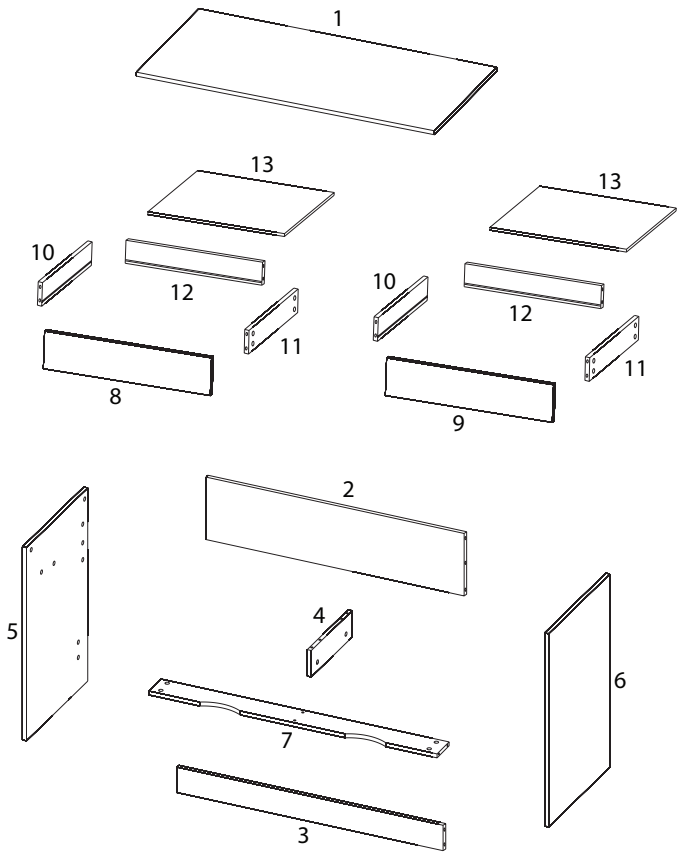

3/12

1	2	3	4	5
x 1	x 1	x 1	x 1	x 1
6	7	8	9	10
x 1	x 1	x 1	x 1	x 2
11	12	13	A	B
x 2	x 2	x 3	x 32	x 32
C	D	E	F	I
ST5 x 45	M7 x 38		ST3 x 12	
x 8	x 4	x 6	x 24	x 1

G + H

x 4

4/12

2129/RONDANE/061026/

!

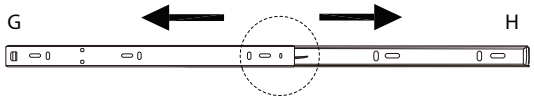

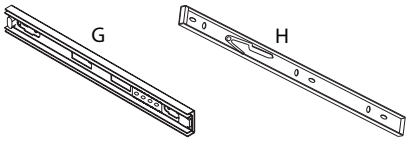

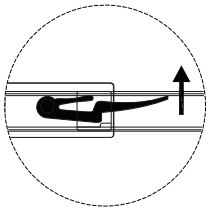

5/12

1

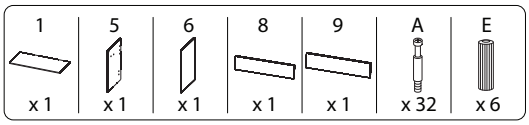

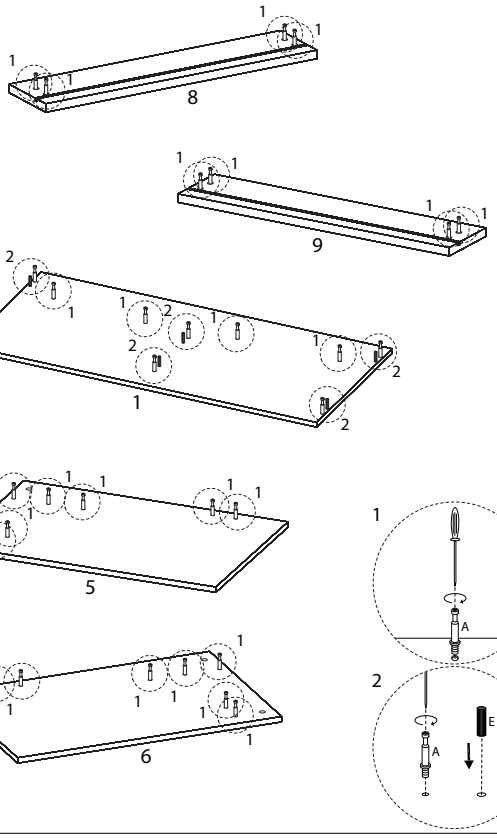

6/12

2 x 2

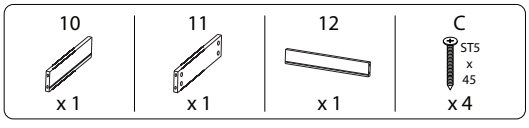

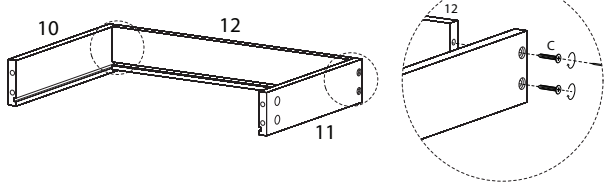

4

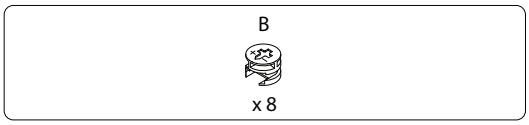

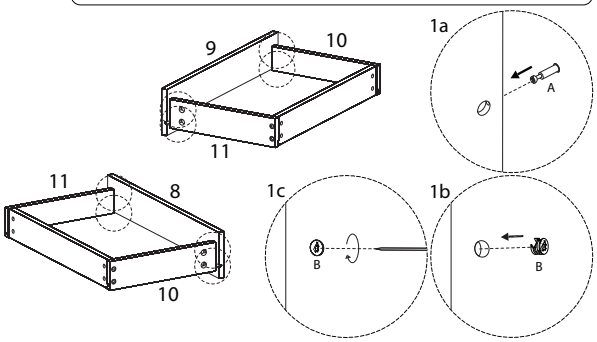

3 x 2

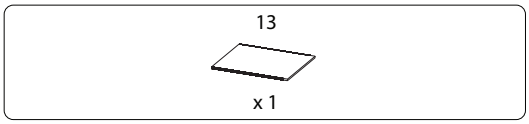

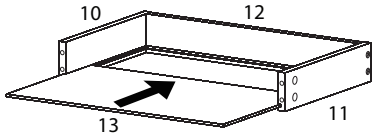

7/12

5

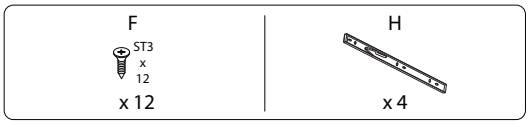

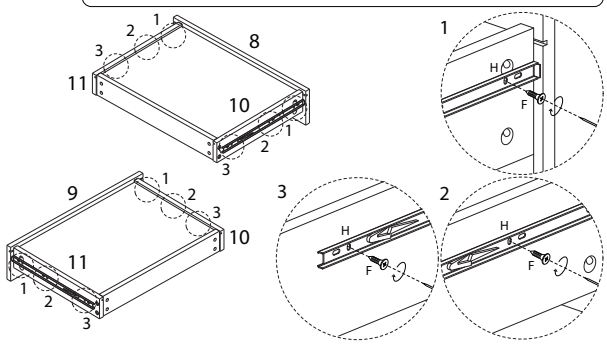

8/12

6

4	F	G
x 1	ST3 x 12 x 6	x 2

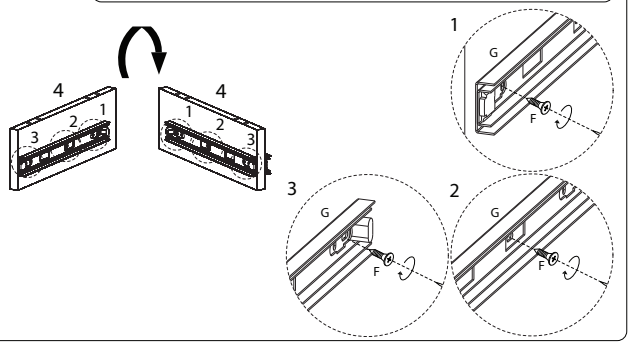

8

2	D
x 1	M7 x 38 x 2

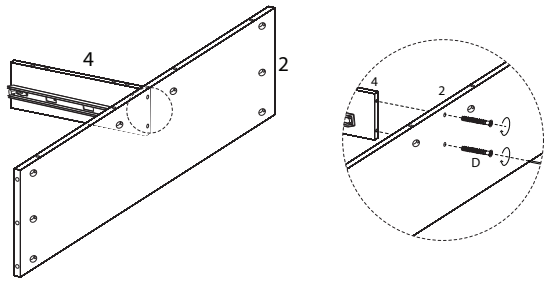

7

F	G
ST3 x 12 x 6	x 2

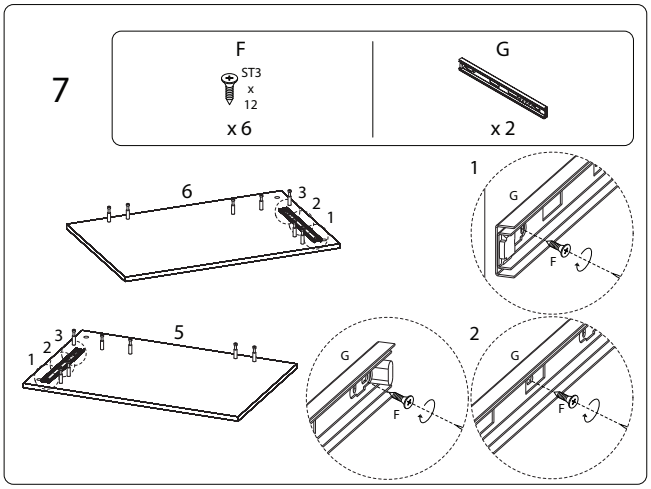

9

7	D
x 1	M7 x 38 x 2

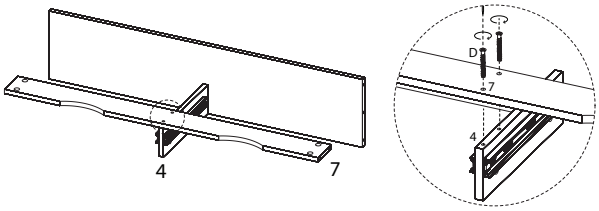

10

3	B
x 1	x 7

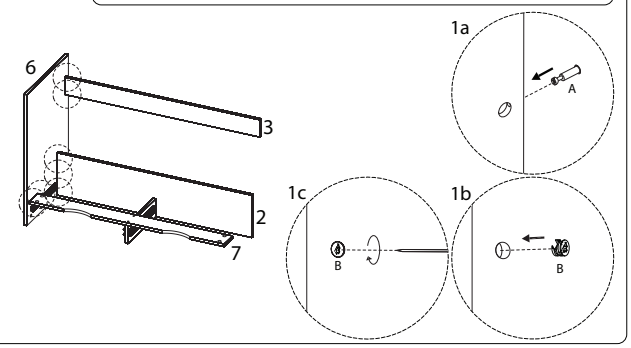

12

B
x 10

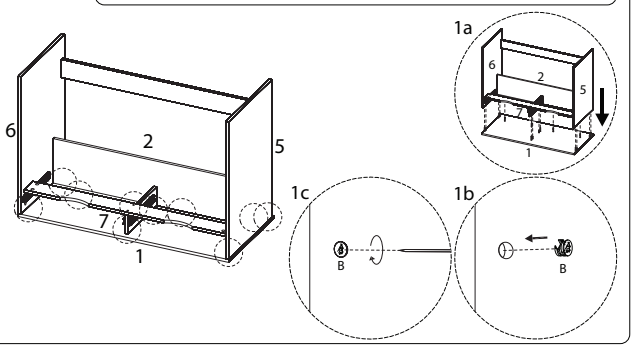

11

B
x 7

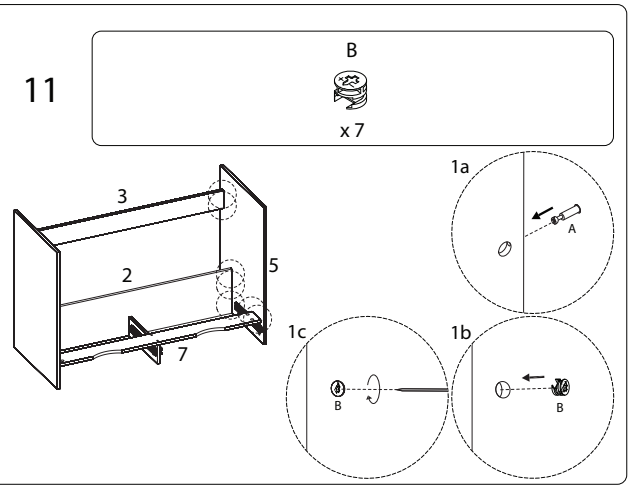

13

