# SAVAR

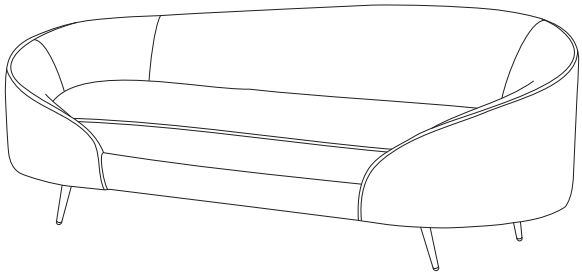

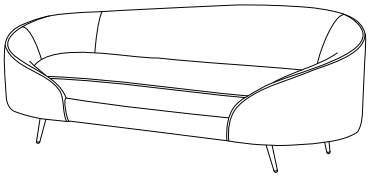

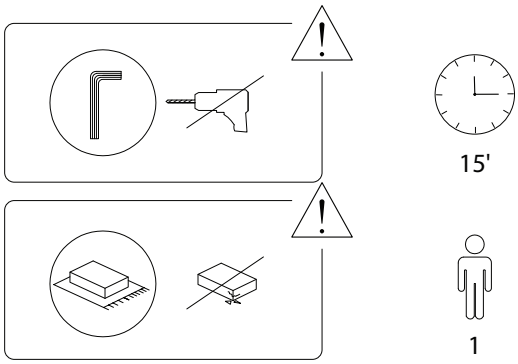


1/3



1919/SAVAR/170325/

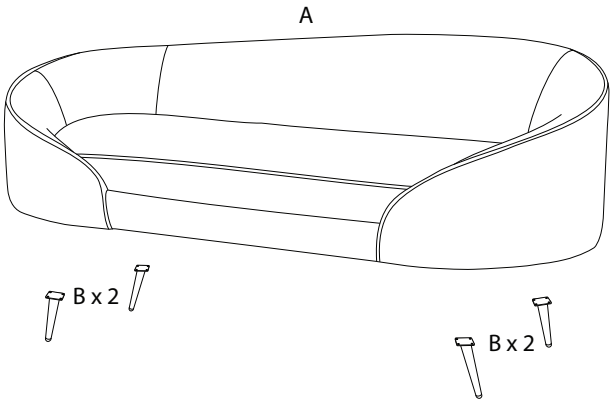


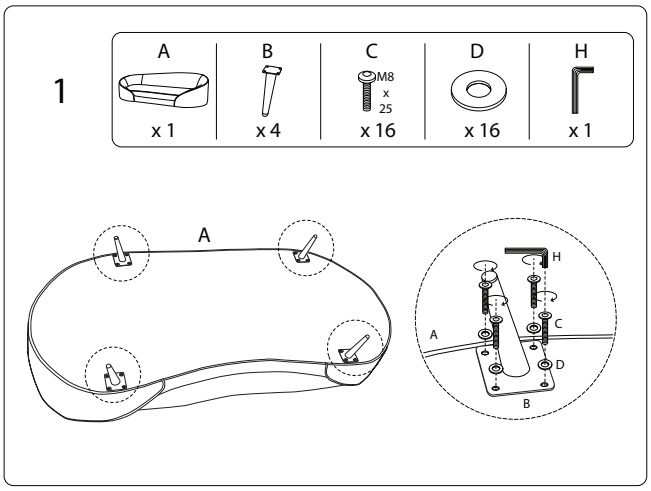


| A | B | C | D | H |
|---|---|---|---|---|
| x 1 | x 4 | M8 x 25 x 16 | x 16 | x 1 |

2/3



3/3

1919/SAVAR/170325/