FROME

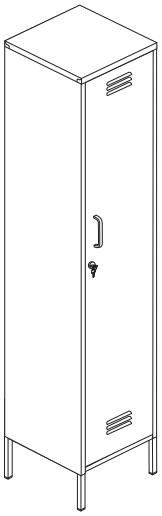

1/12



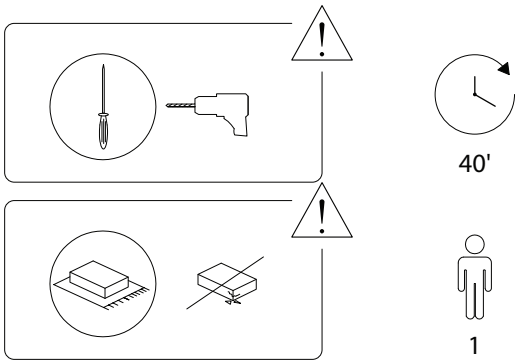

2/12

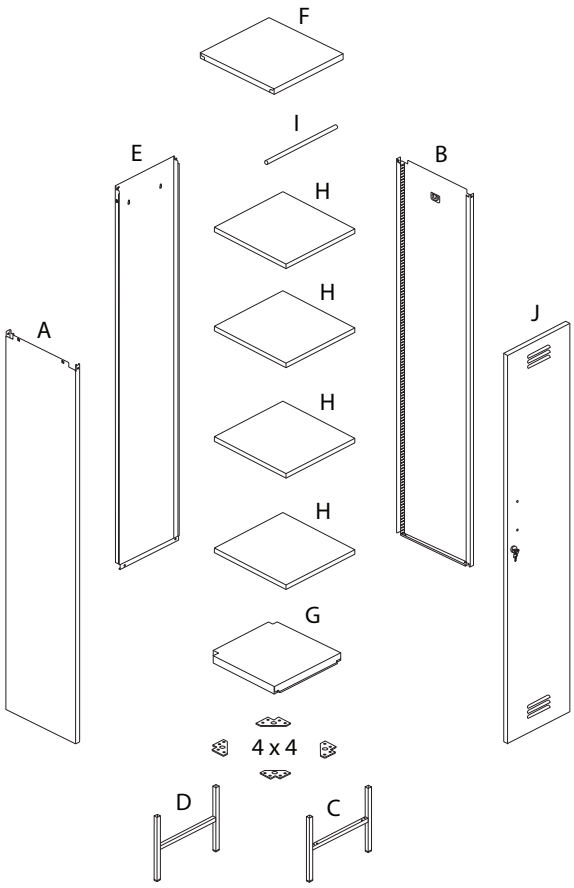

3/12

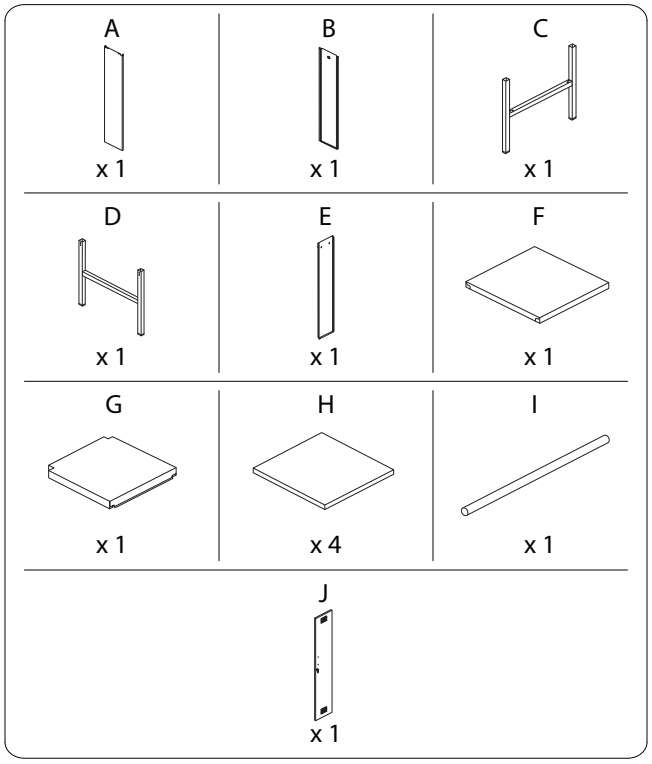

4/12

1	2A	2B
		
x 20	x 1	x 1
3A	**3B**	**3C**
		
x 1	x 2	x 2
4	**5A**	**5B**
		
x 4	x 2	x 2
5C	**6**	**7A**
		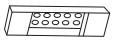
x 2	x 16	x 2
7B		
		
x 2		

1

A	B	C	D
x 1	x 1	x 1	x 1

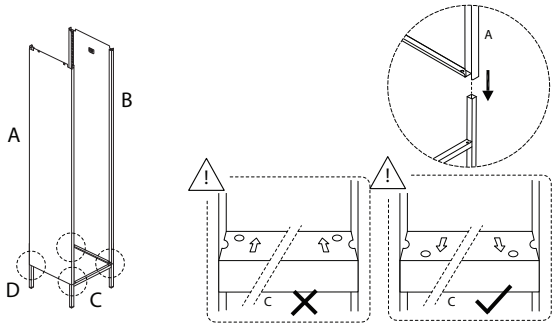

2

1
M4 x 10
x 4

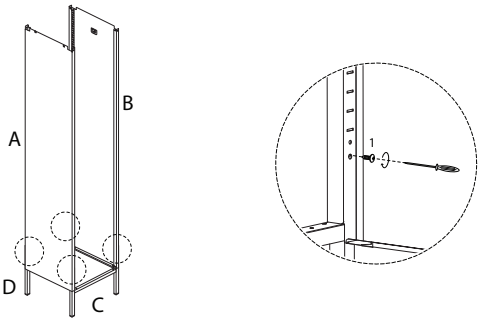

3

E
x 1

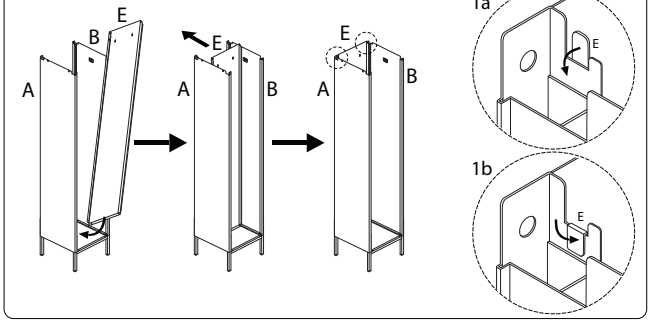

4

G
x 1

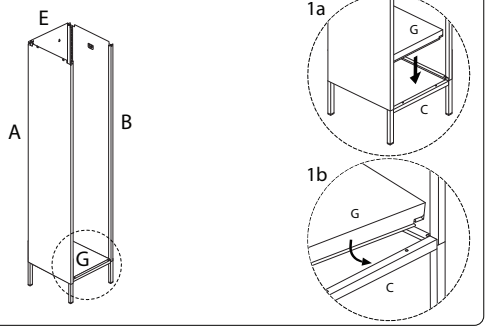

5

F
x 1

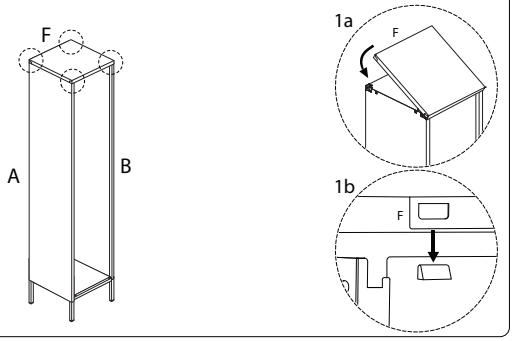

6

1	4
M4 x 10	
x 16	x 4

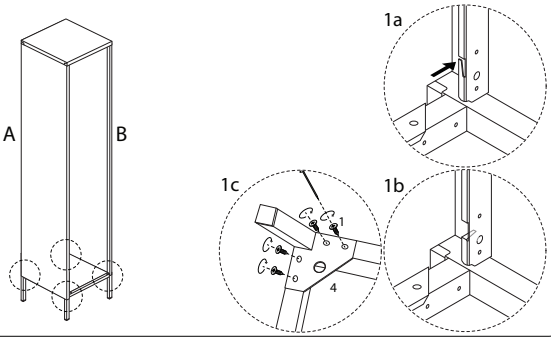

7

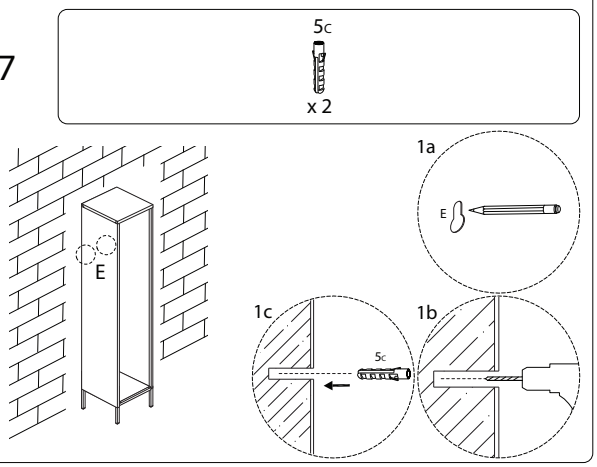

8

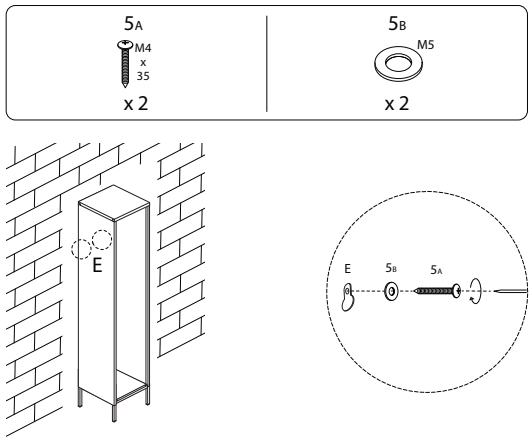

9

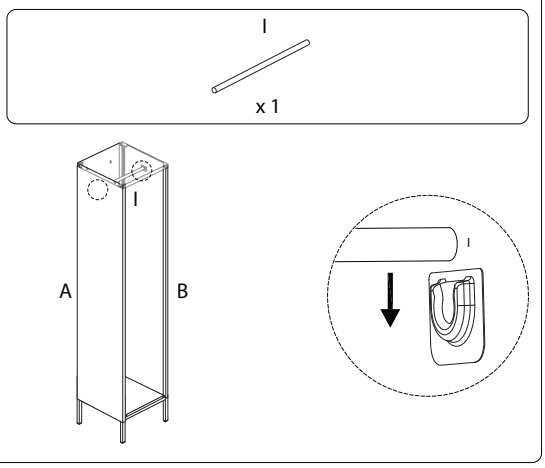

10

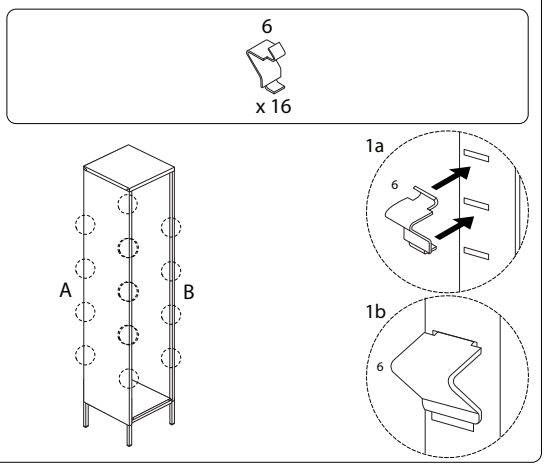

11

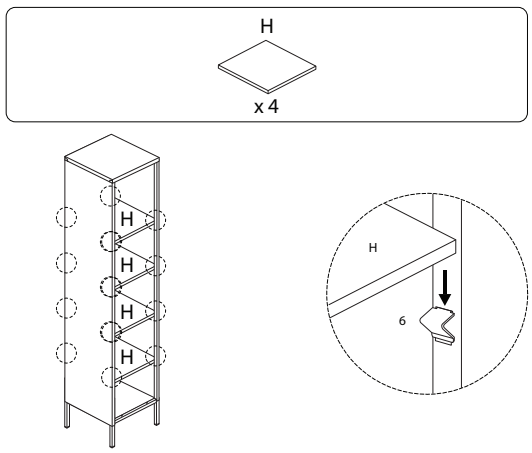

12

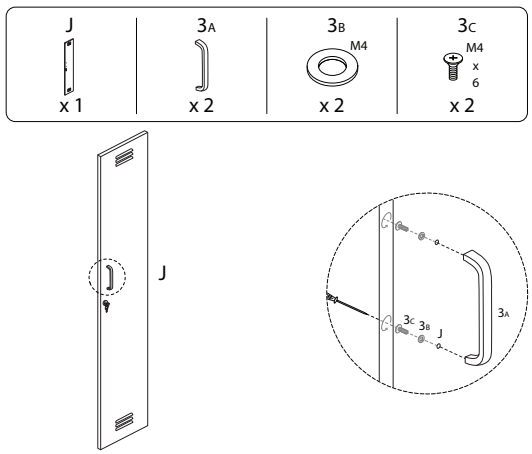

13

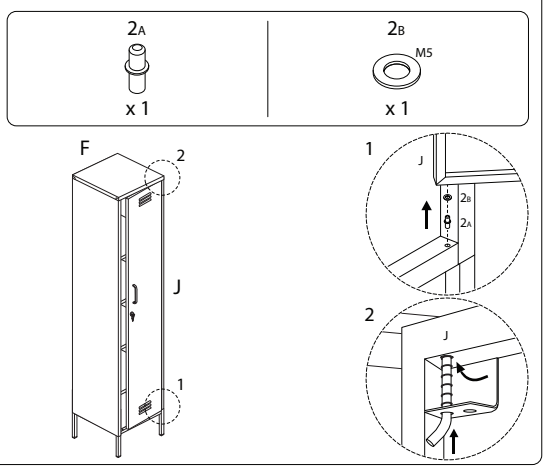

14

