GRAFTON

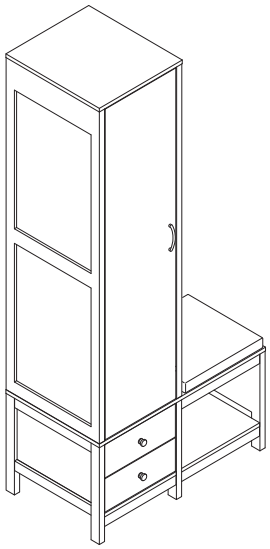

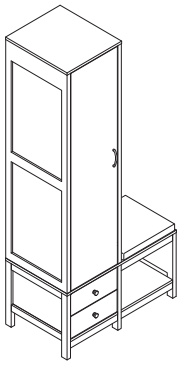

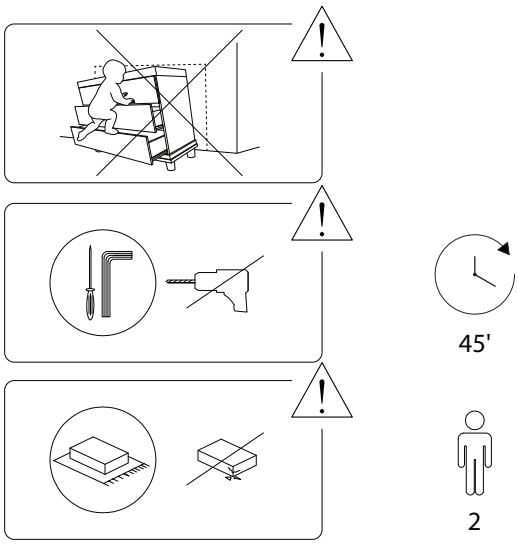
45'
2

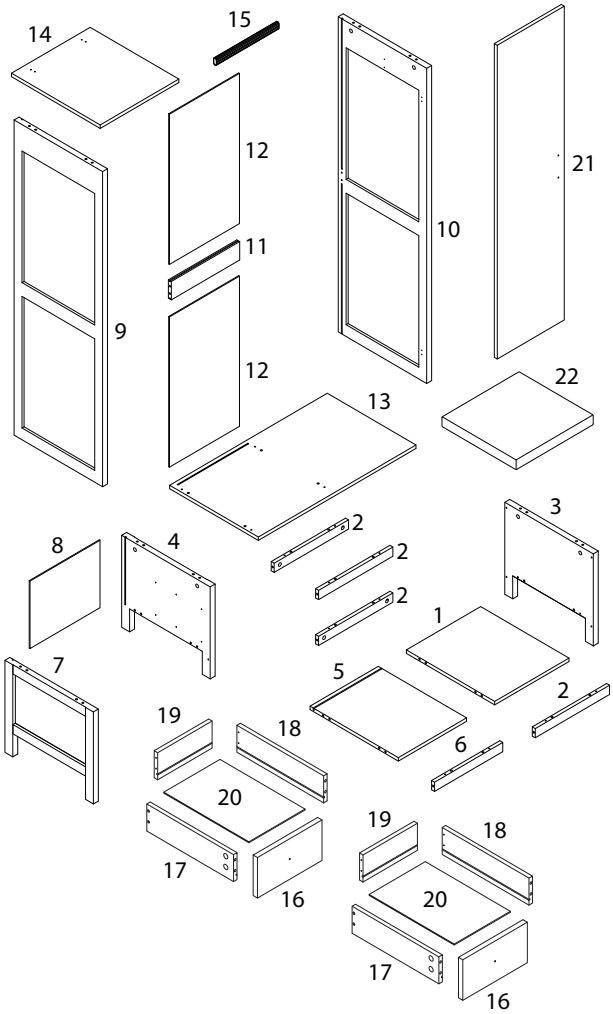
14
15
12
11
12
9
10
21
22
13
3
2
2
2
8
4
1
7
5
2
19
18
6
20
17
16
19
18
20
17
16

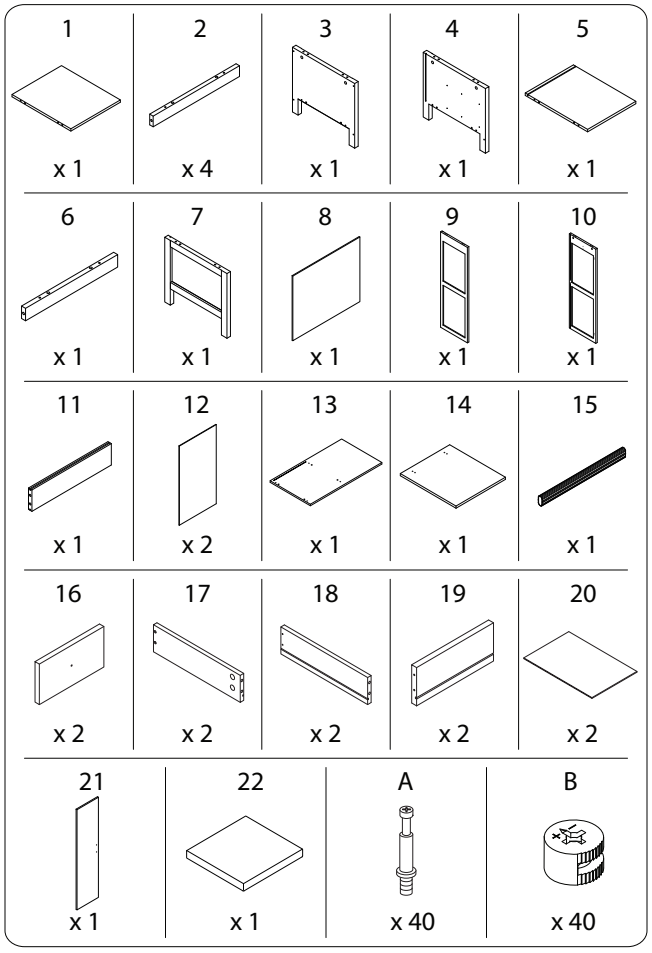
1 x 1
2 x 4
3 x 1
4 x 1
5 x 1
6 x 1
7 x 1
8 x 1
9 x 1
10 x 1
11 x 1
12 x 2
13 x 1
14 x 1
15 x 1
16 x 2
17 x 2
18 x 2
19 x 2
20 x 2
21 x 1
22 x 1
A x 40
B x 40

C	D	E	F1	F2
x 32	M4 x 35 x 10	M3.5 x 12 x 24	x 12	M3 x 16 x 12
G	H	I1	I2	J
x 3	M4 x 14 x 16	x 2	M4 x 20 x 2	M4 x 45 x 10
K1	K2	L	M	N
x 2	M3 x 16 x 4	x 2	x 2	M4 x 14 x 2
O1	O2	P	Q	R
x 1	M4 x 20 x 2	x 2	M5 x 50 x 4	x 6
S	CL	CR	DL	DR
x 1	x 2	x 2	x 2	x 2

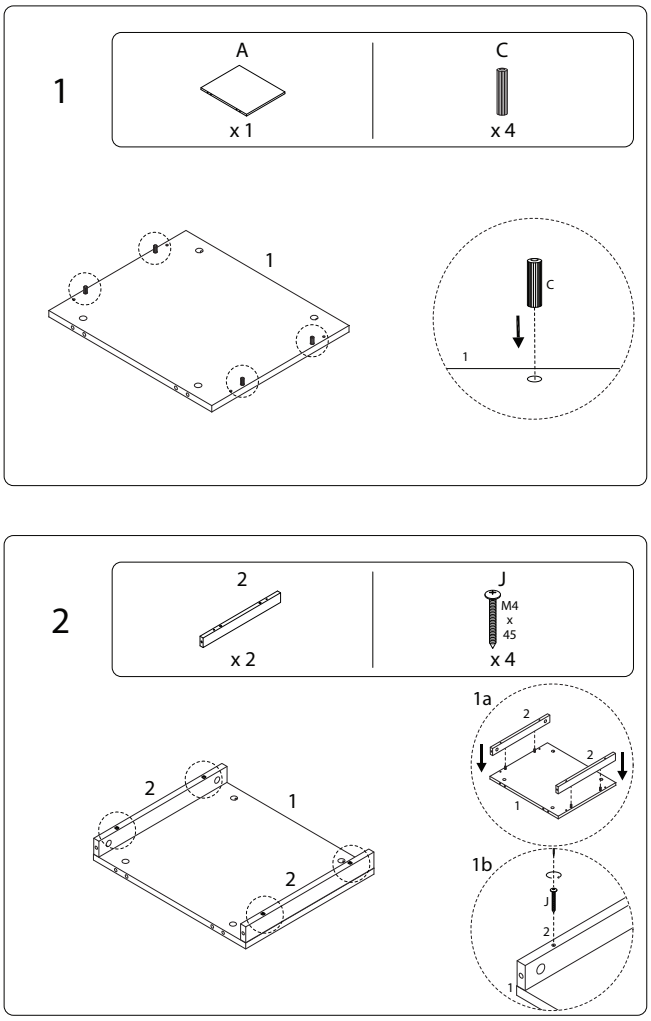

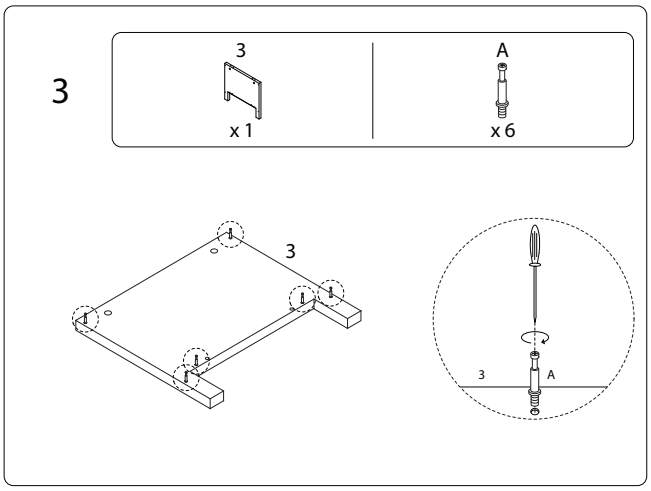

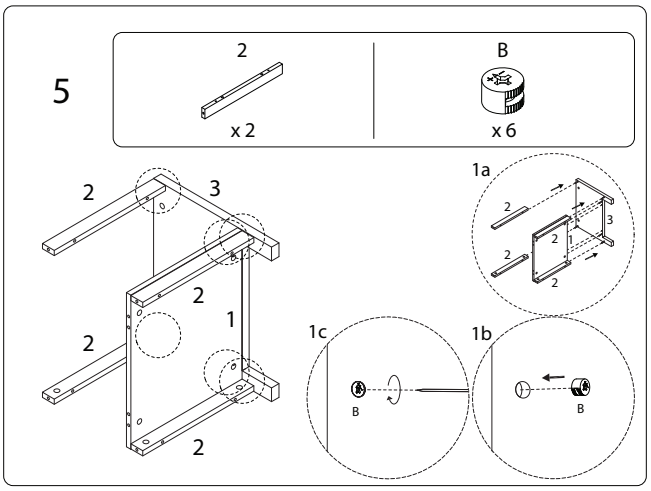

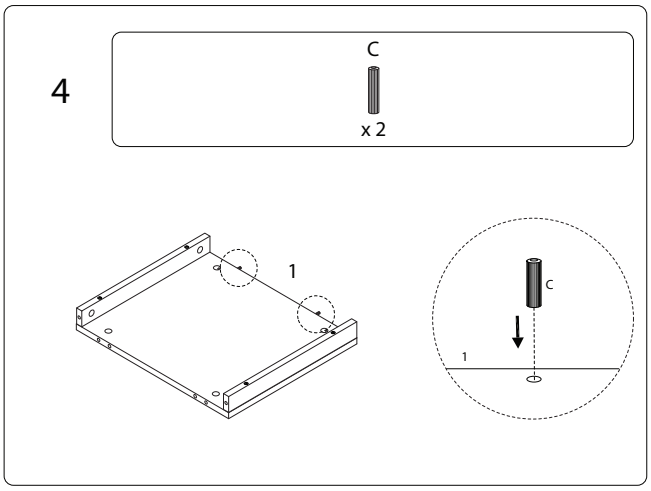

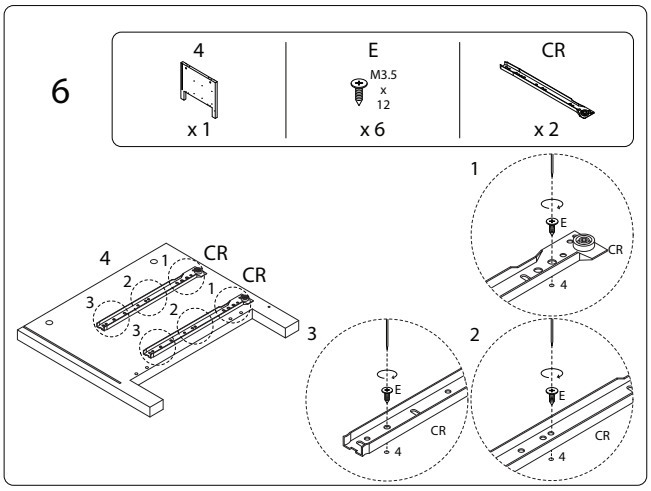

7

A
x 9

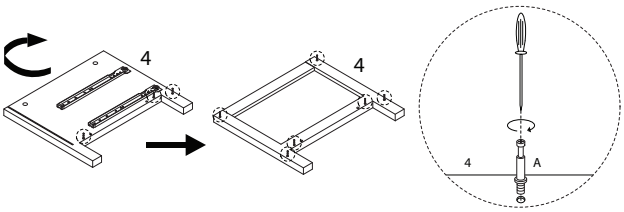

8

C
x 2

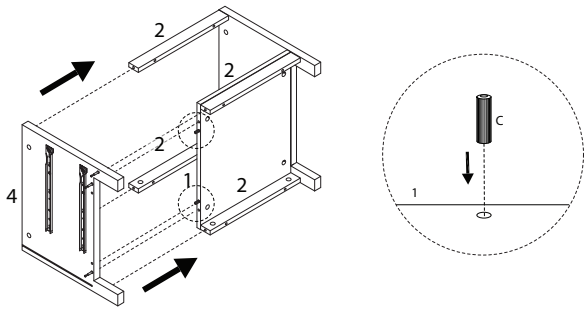

9

B
x 6

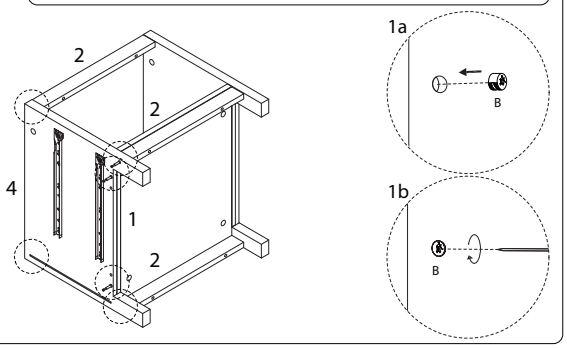

10

7	E	CL
x 1	M3.5 x 12 x 6	x 2

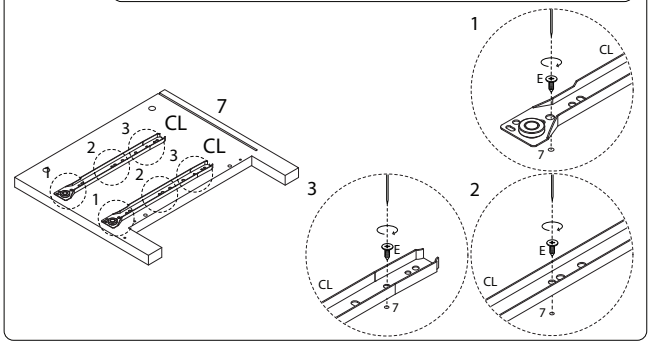

11

A
x 3

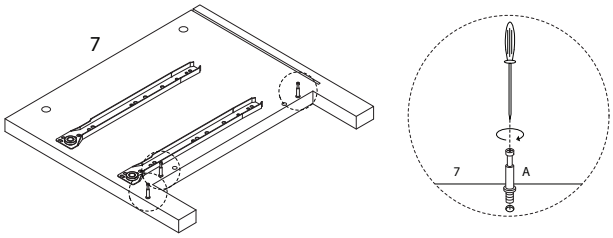

12

C
x 2

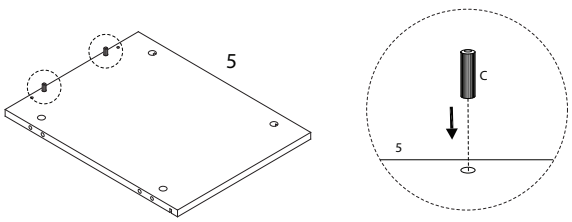

13

6	J
x 2	M4 x 45 x 2

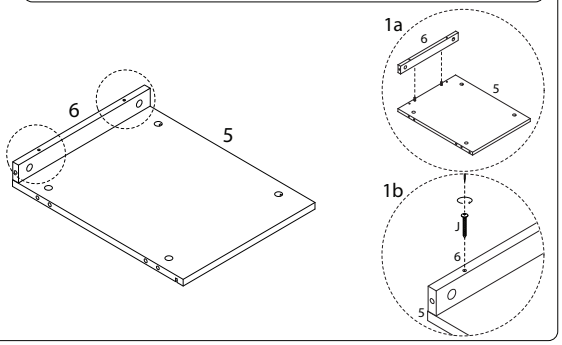

14

C
x 4

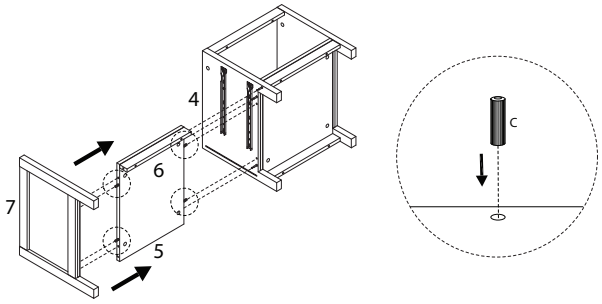

15

B

x 6

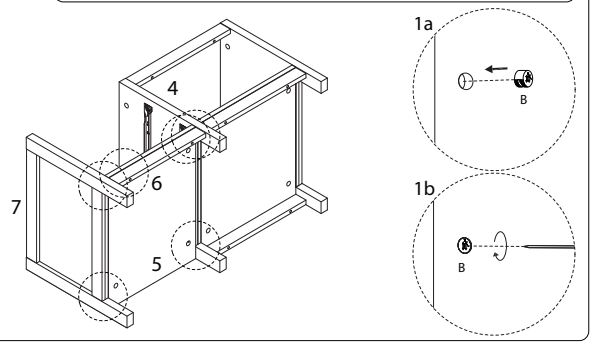

16

R

x 6

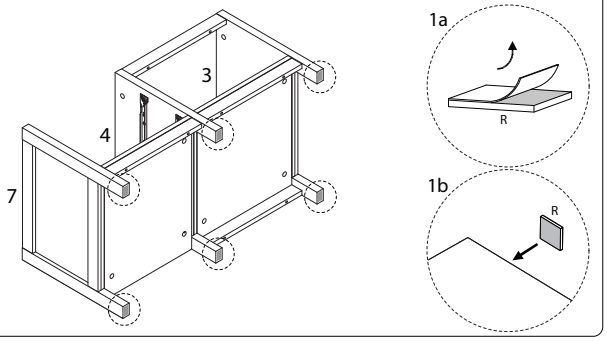

16

8

x 1

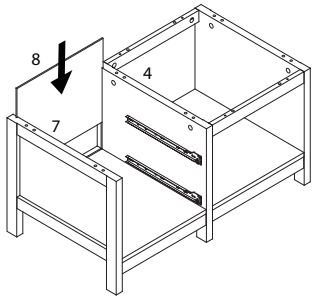

17

9	10	A
x 1	x 1	x 4

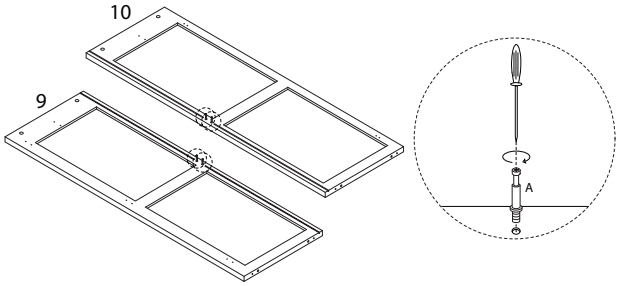

18

H	K1	K2	L
M4 x 14		M3 x 16	
x 4	x 2	x 4	x 2

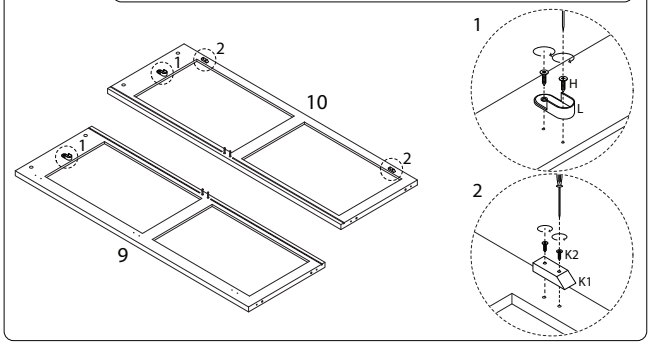

20

12

x 1

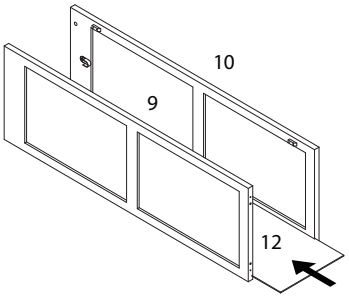

19

11	B
x 1	x 4

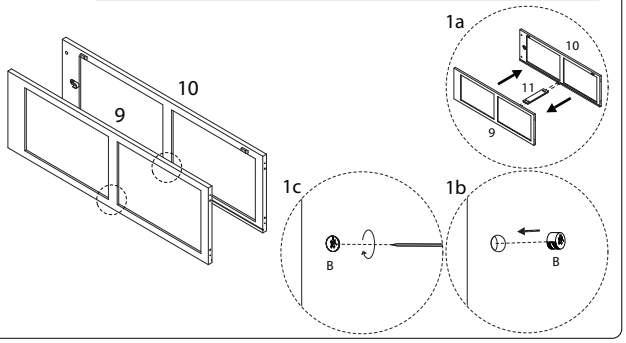

21

13	A
x 1	x 6

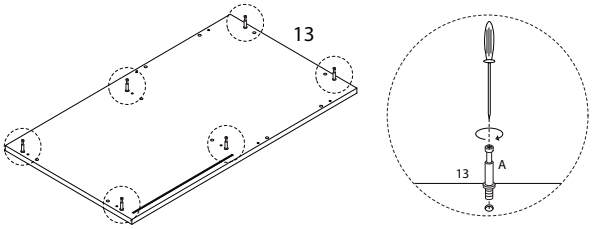

22

C
x 4

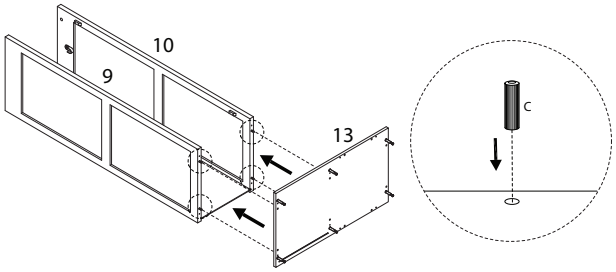

23

Q
M5 x 50
x 4

S
x 1

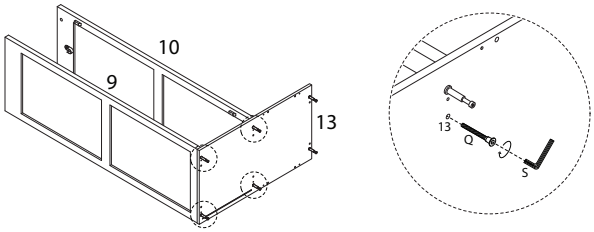

24

14
x 1

A
x 4

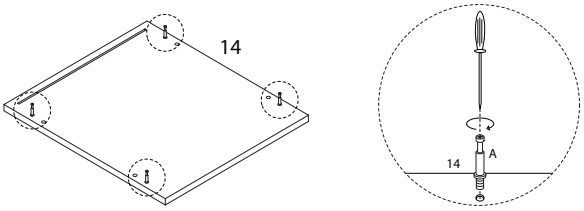

25

12
x 1

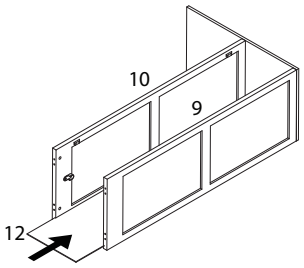

26

C
x 4

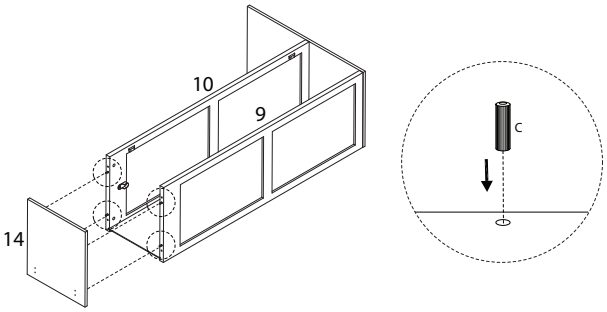

27

C
x 10

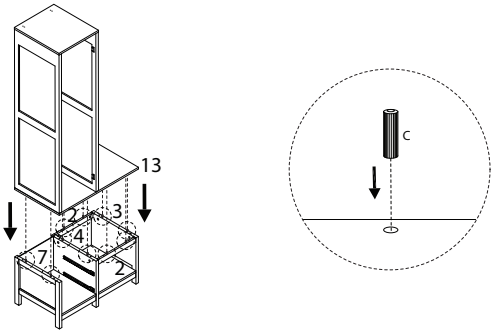

28

B
x 6

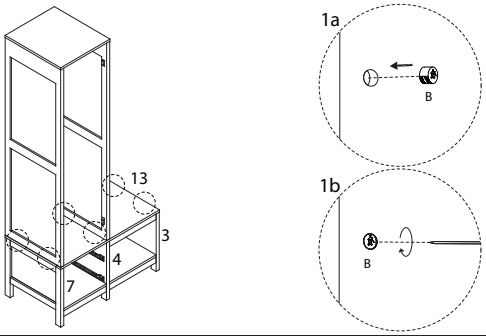

29

J
M4 x 45
x 4

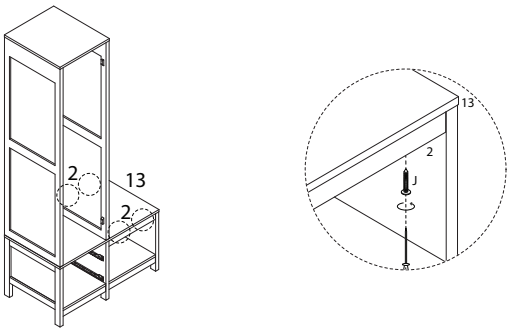

30

F1	F2
x 12	M3 x 16 x 12

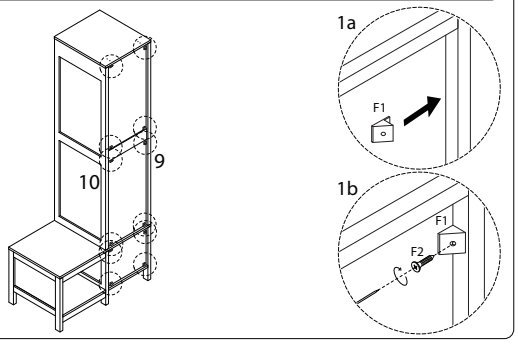

31

15
x 1

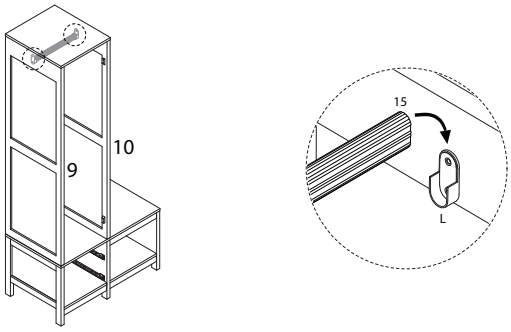

32 x 2

17	18	19	D
x 1	x 1	x 1	M4 x 35 x 4

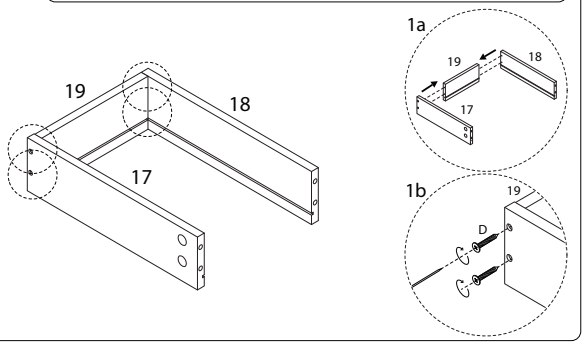

33 x 2

20
x 1

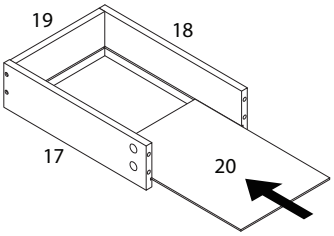

35 x 2

16	A	I1	I2
x 1	x 4	x 1	M4 x 20 x 1

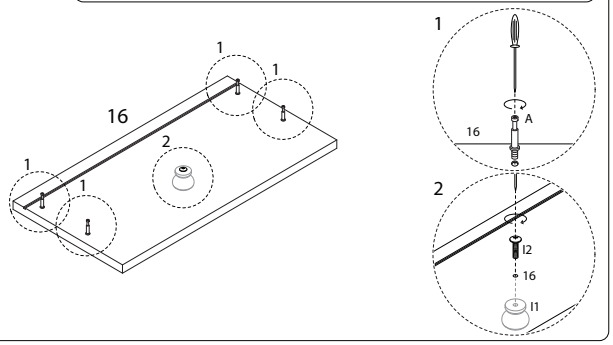

36 x 2

B
x 4

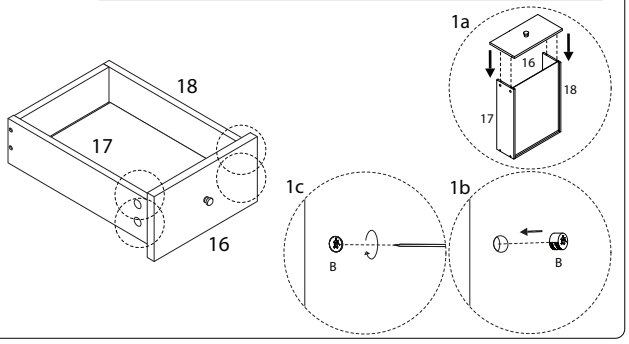

37 x 2

DL	DR	E
x 1	x 1	M3.5 x 12 x 6

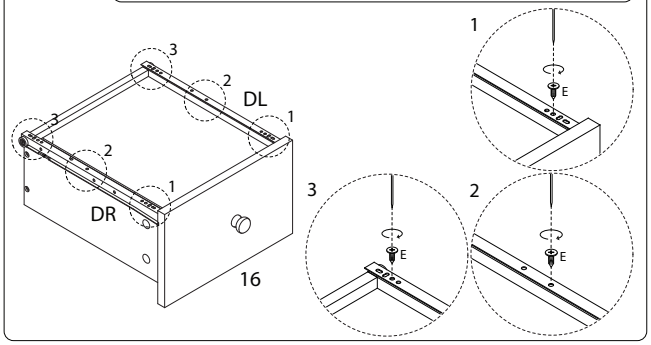

38

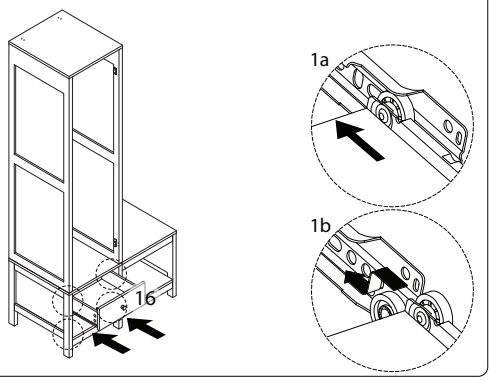

39

21	G	H	O1	O2
x 1	x 3	M4 x 14 x 6	x 1	M4 x 20 x 2

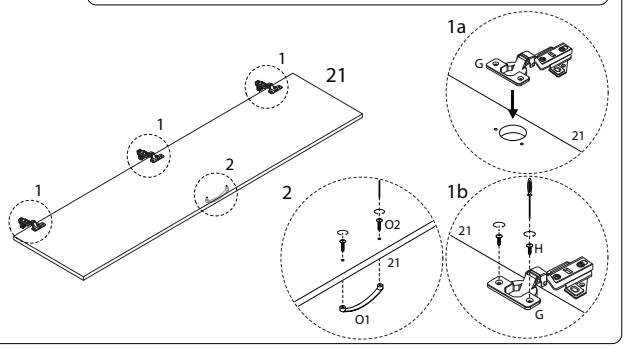

40

H
M4 x 14 x 12

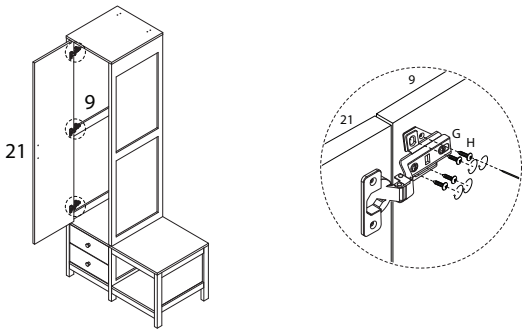

41

22
x 1

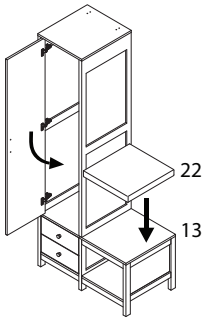

42

M	N
x 2	M4 x 14 x 2

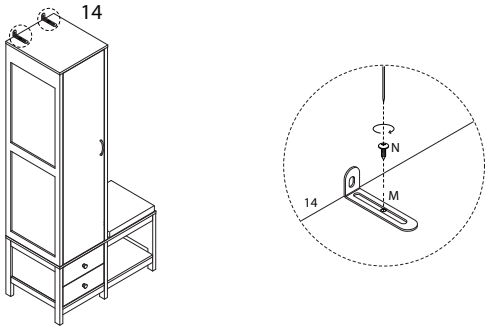

43
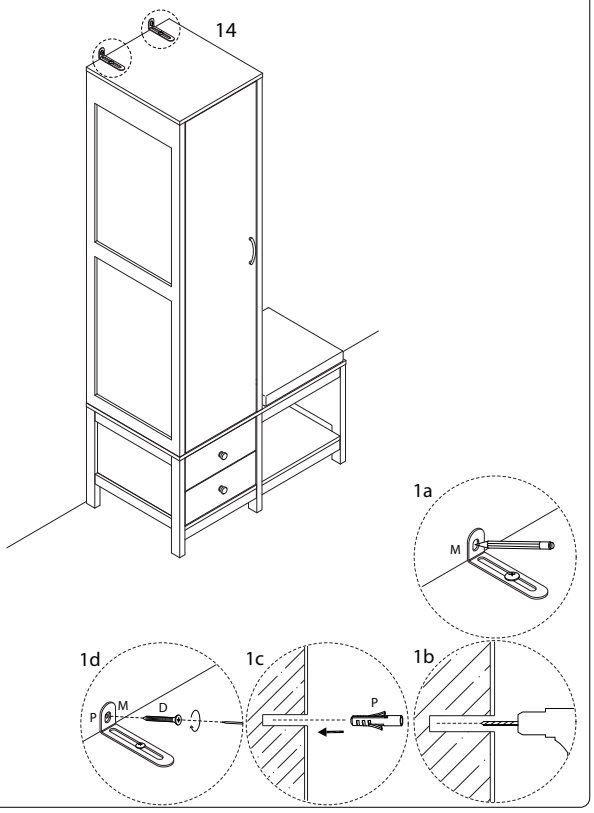
D	P
M4 x 35 x 2	x 2