MESNALI

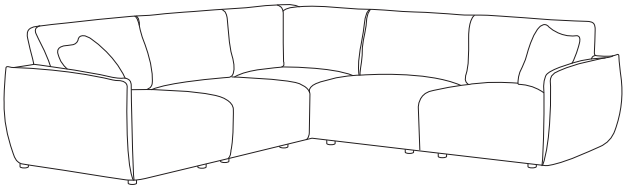

1/15

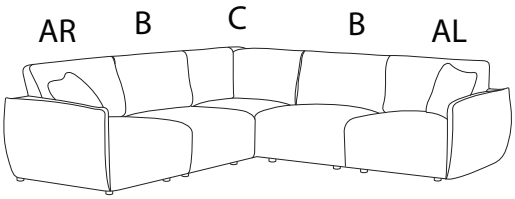

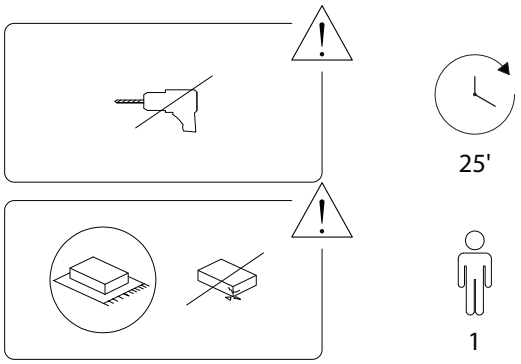

2/15

AR

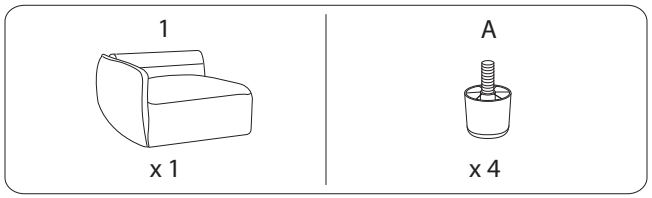

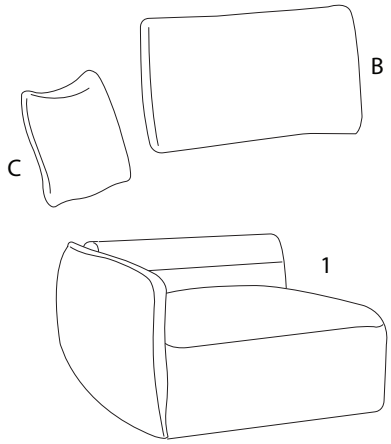

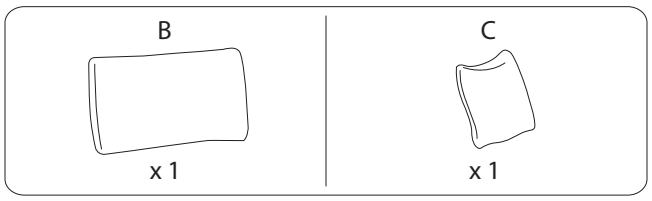

3/15

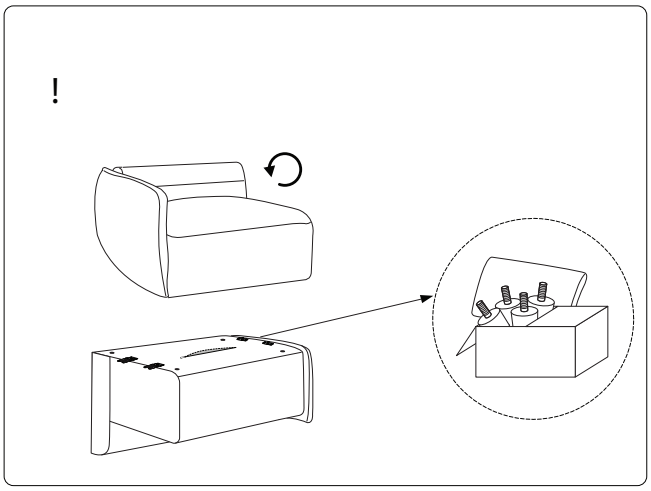

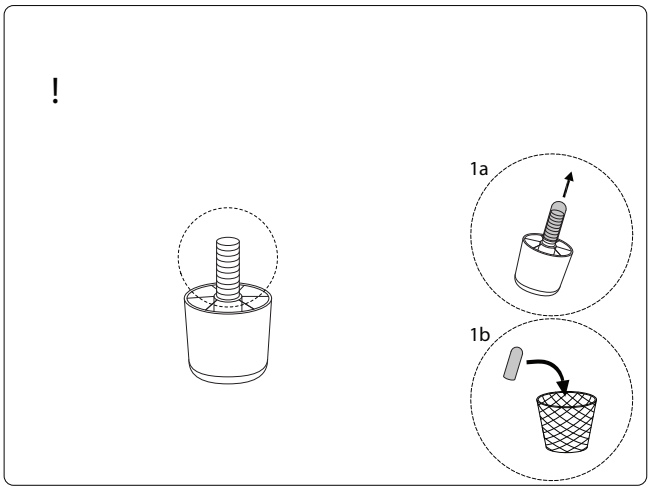

4/15

2650/MESNALI/250226/

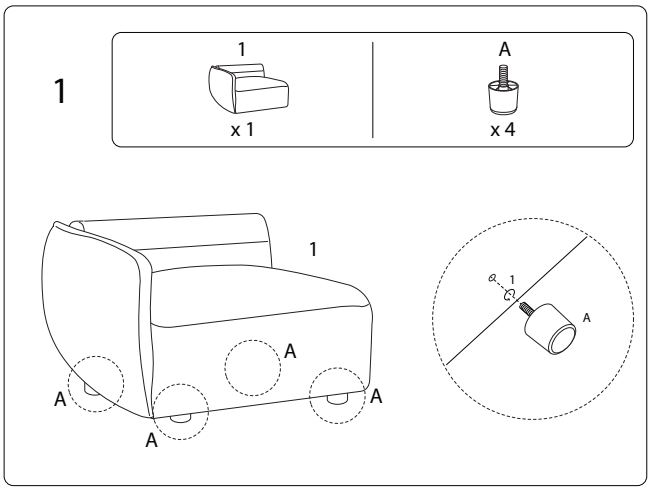
1
1
x 1
A
x 4
1
A
A
A
1
A

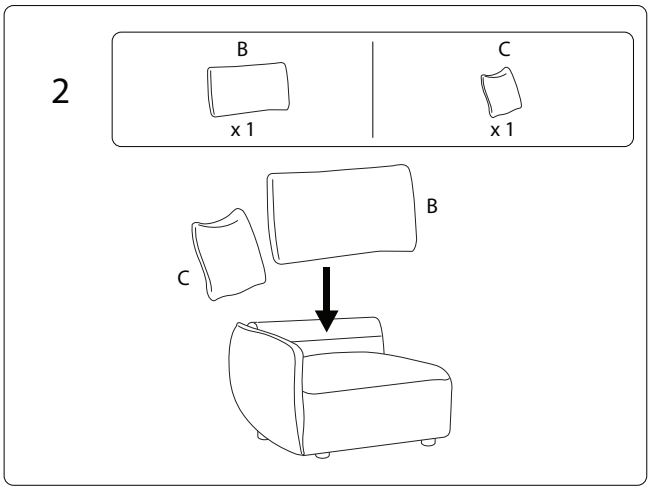
2
B
x 1
C
x 1
B
C

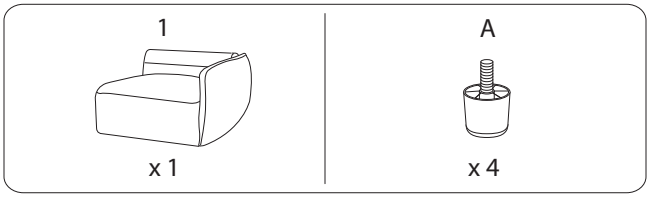
1
x 1
A
x 4

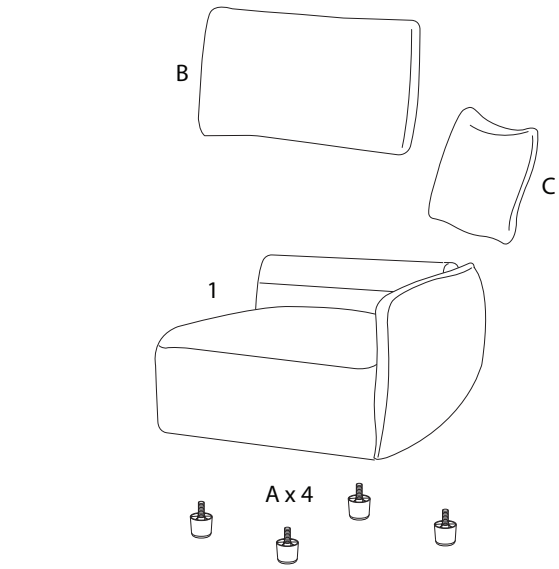
B
C
1
A x 4

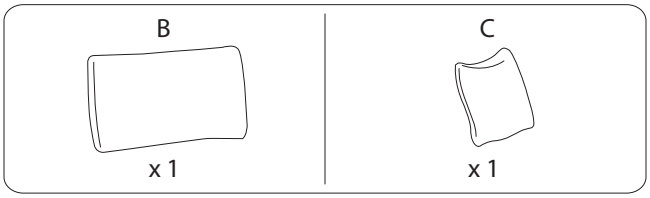
B
x 1
C
x 1

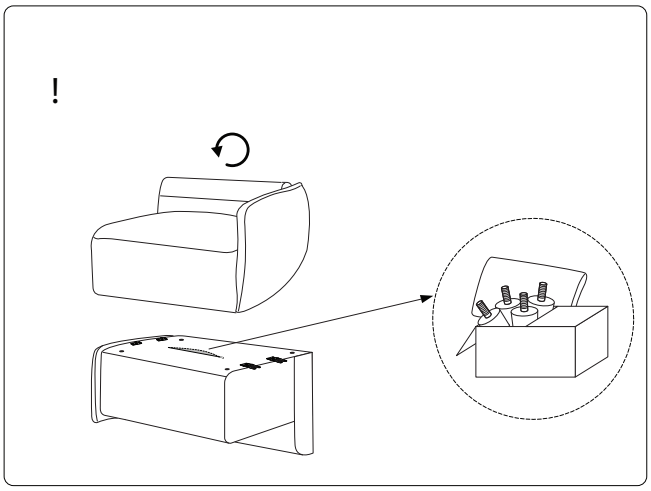
!

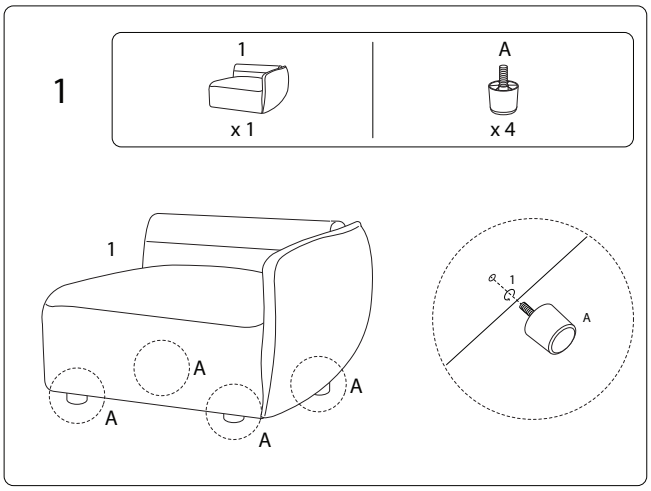
1
1
x 1
A
x 4
1
A
A
A
1
A

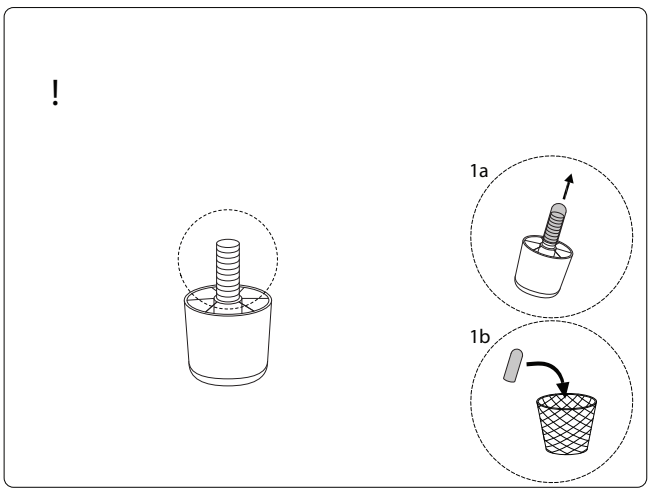
!
1a
1b

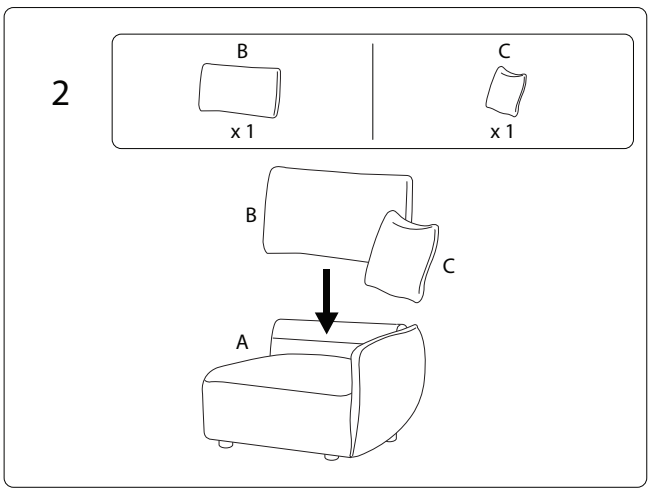
2
B
x 1
C
x 1
B
C
A

B x 2

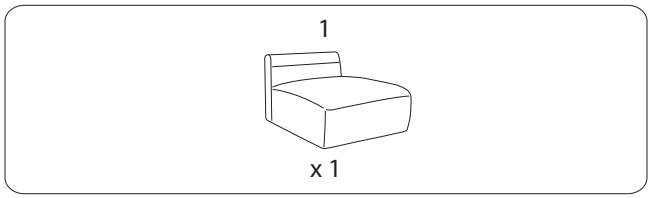
1
x 1

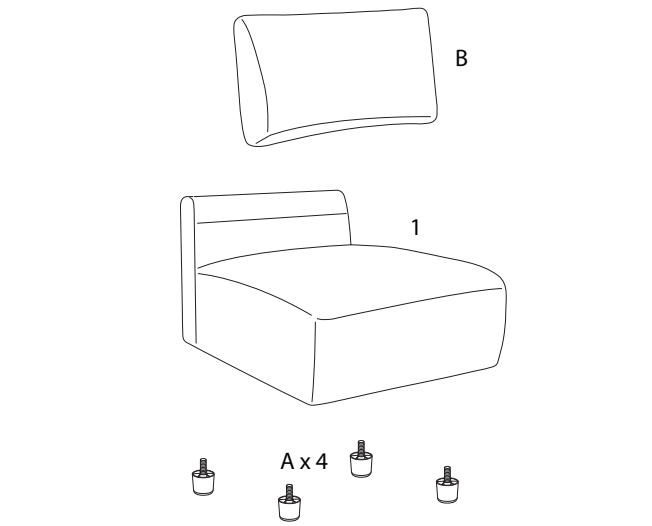
B
1
A x 4

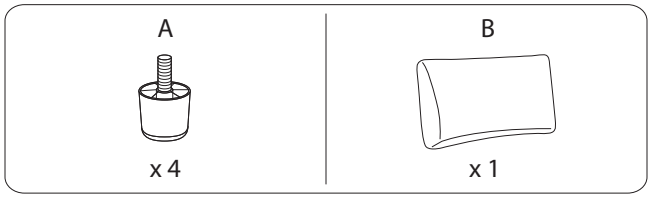
A
x 4
B
x 1

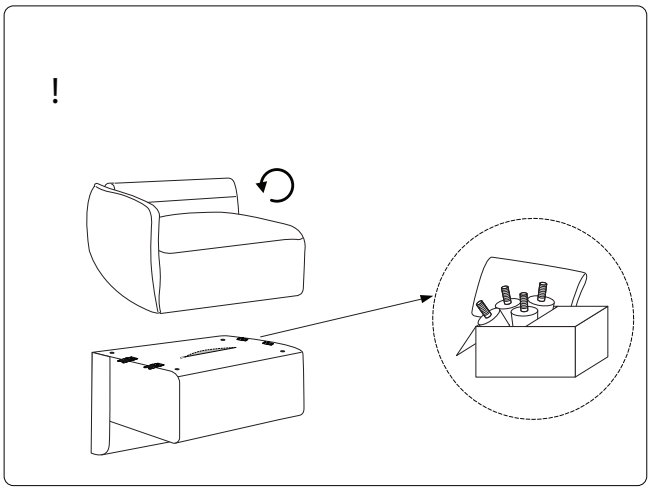
!

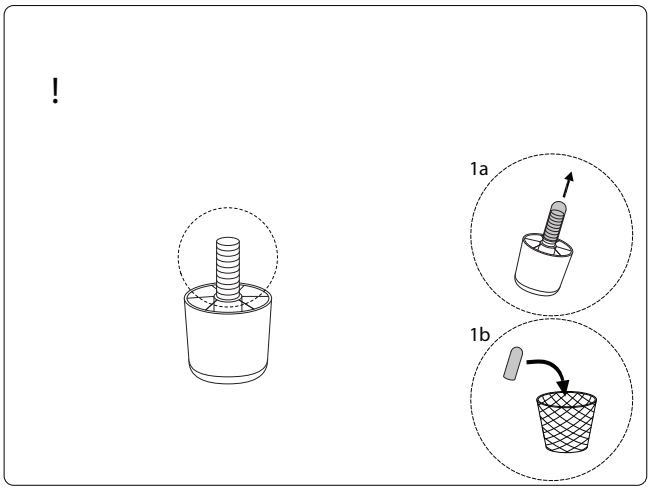
!
1a
1b

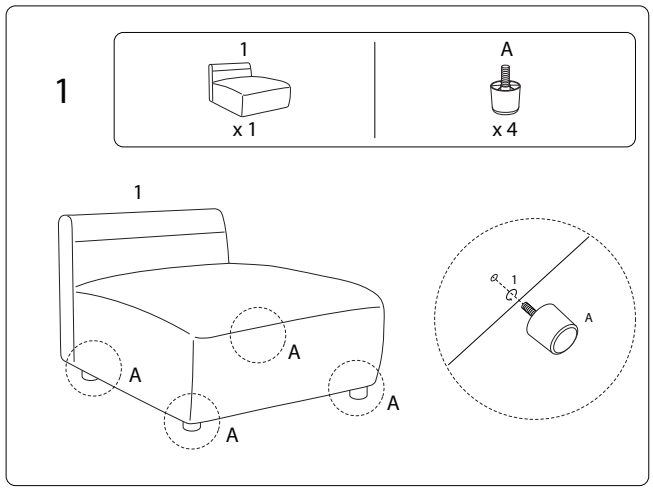
1
1
x 1
A
x 4
1
A
A
A
A
1
A

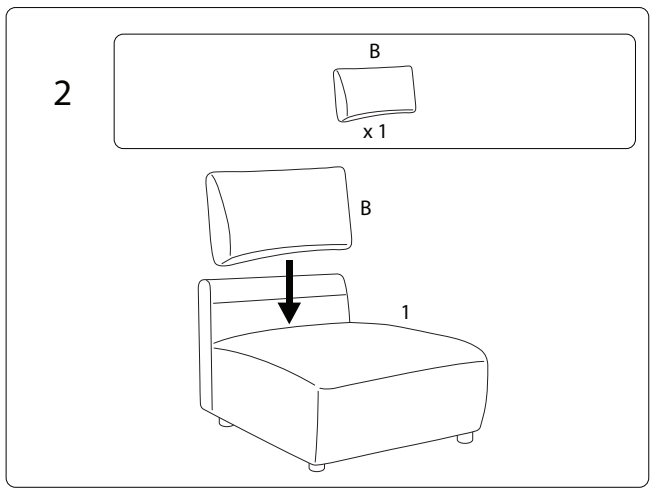
2
B
x 1
B
1

C

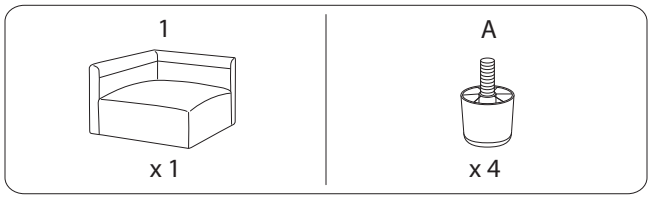
1
x 1
A
x 4

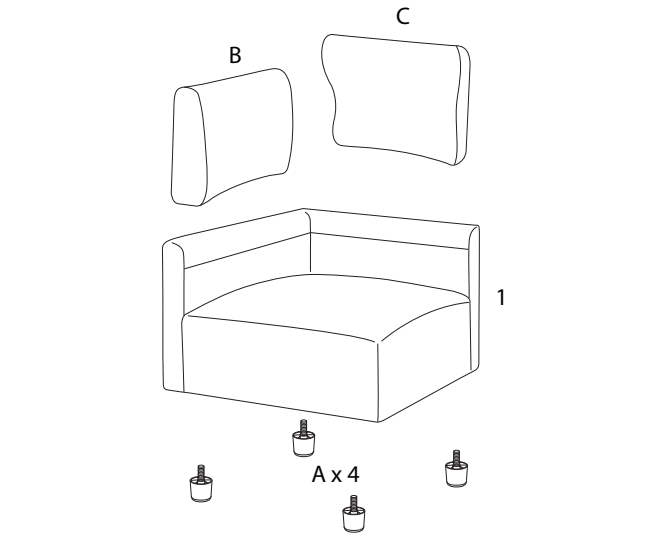
C
B
1
A x 4

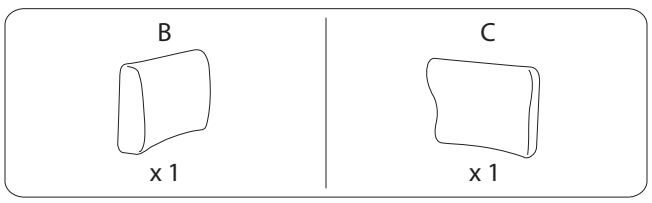
B
x 1
C
x 1

!

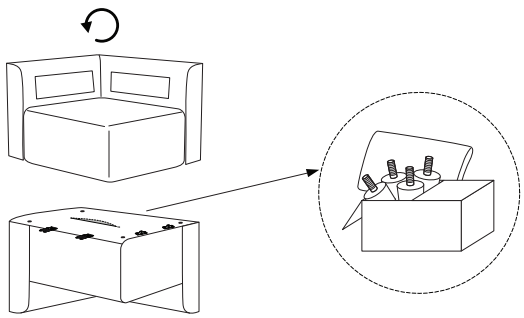

1

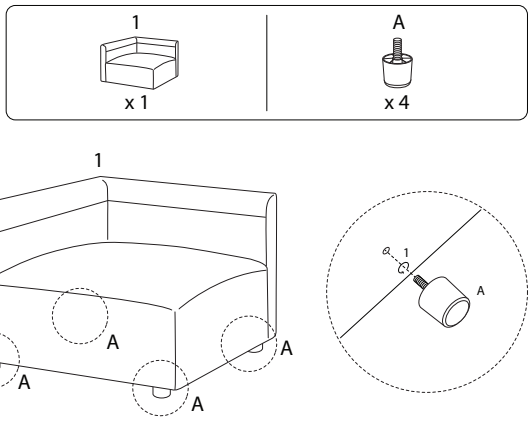

!

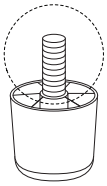

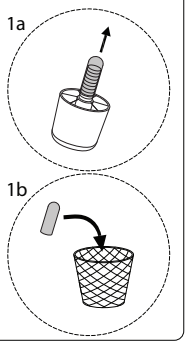

13/15

2

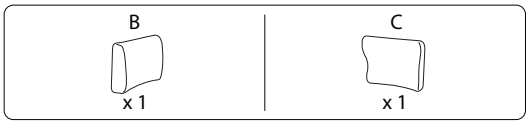

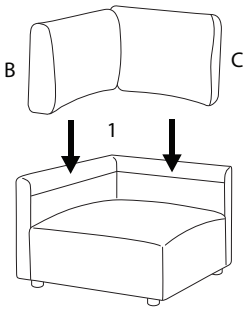

14/15

!

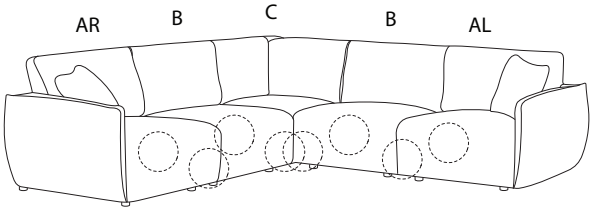

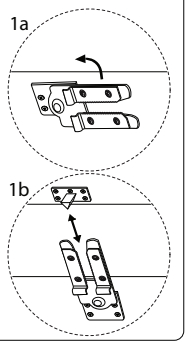

15/15