BINGO RTV 100

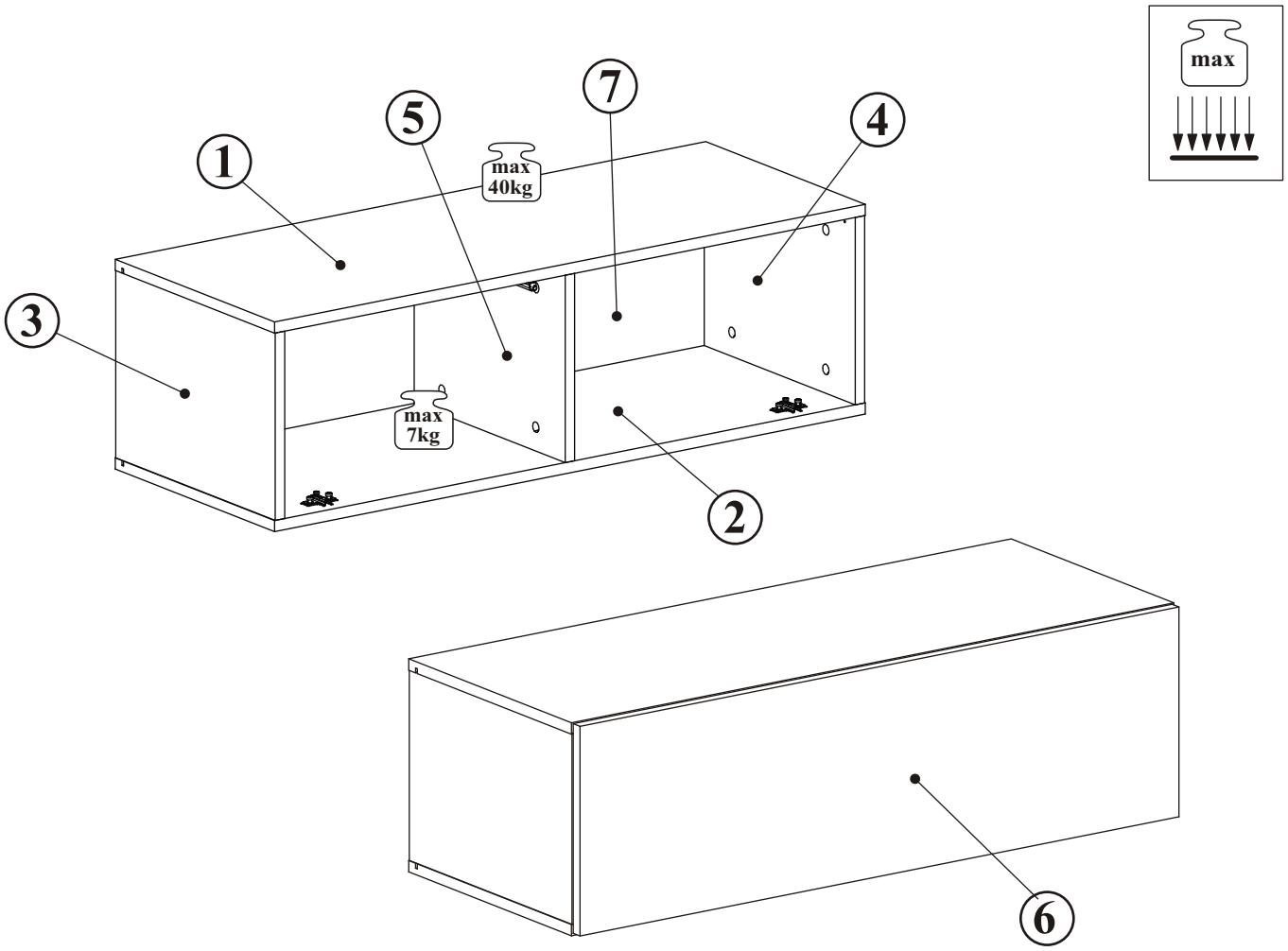

NO	Dim.		Col.-No	Qty
3	270	380	1	1
4	270	380	1	1
1	1002	380	1	1
2	1002	380	1	1
5	270	360	1	1
7	979	282	1	1
6	996	296	1	1

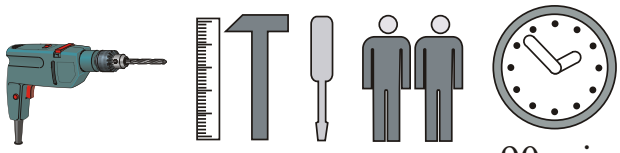

90 min

BINGO RTV 100

A1	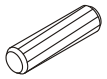	B4	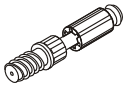	B5		G5		E2	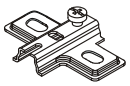	E21	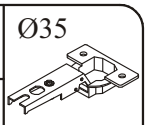
x12	ø8x30	x12		x12	ø15x12	x12		x2	H=0	x2	H=0
T1		BO1	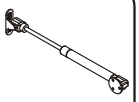	S1	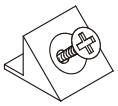	ZX	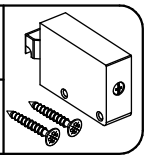	KR2	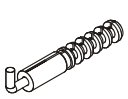	W48	
x1		x2		x12		x3		x3		x4	USØ 4x13
G2		E1		W12		W47					
x1		x4	ø6,3x13	x6		x2					

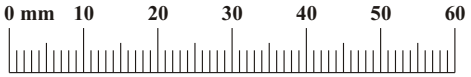

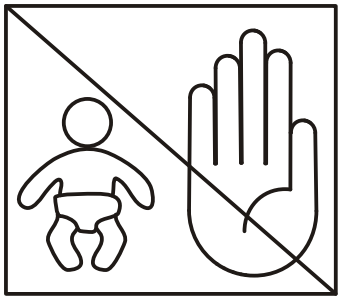

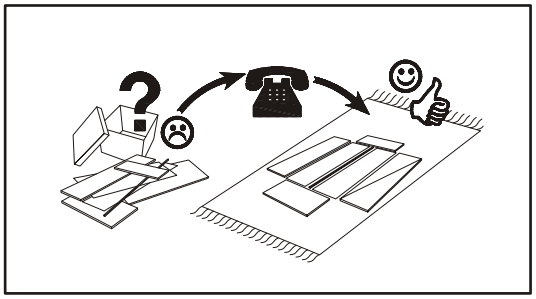

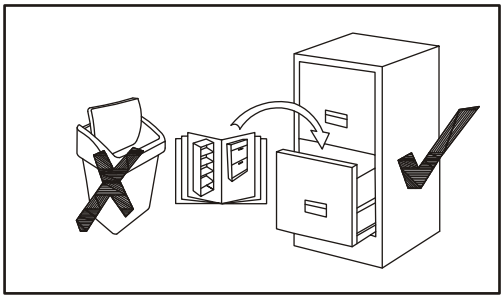

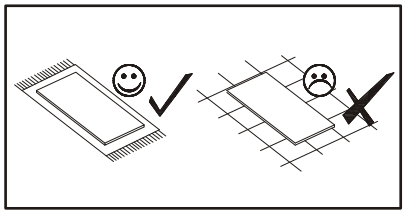

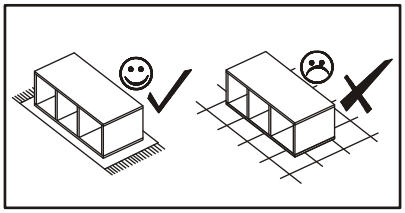

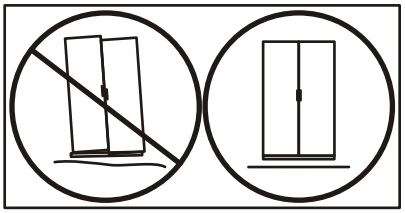

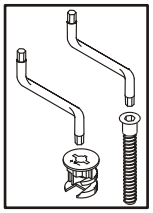

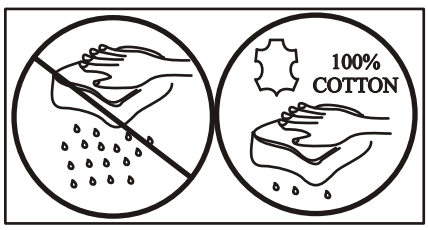



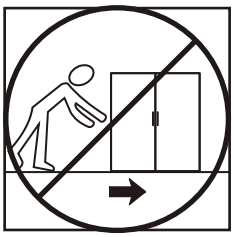

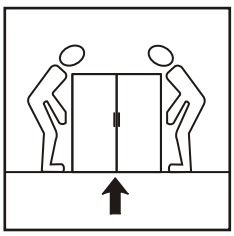

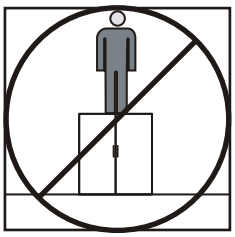

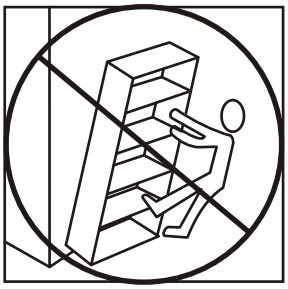

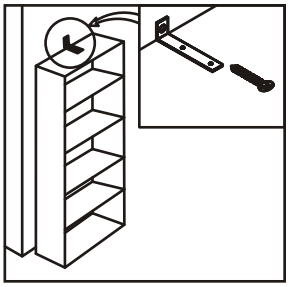



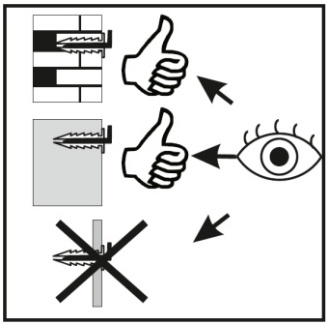

BINGO RTV 100

1

B5	A1
x12	x12
ø15x12	ø8x30

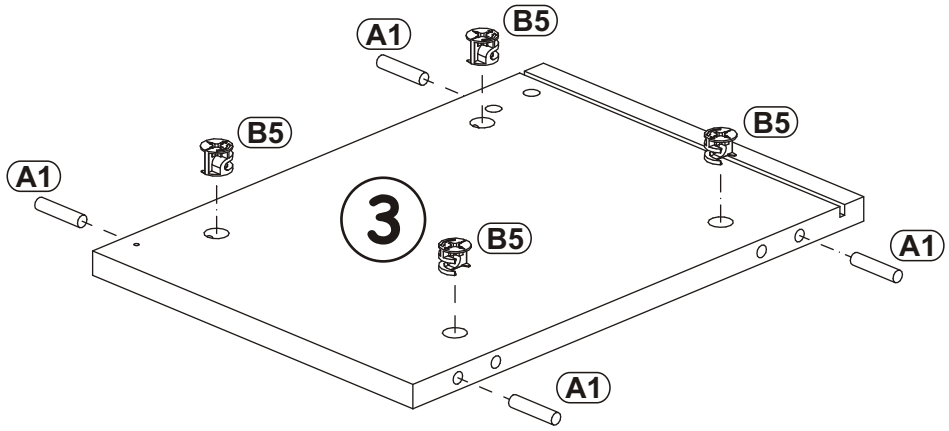

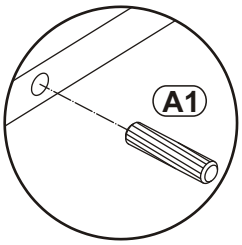

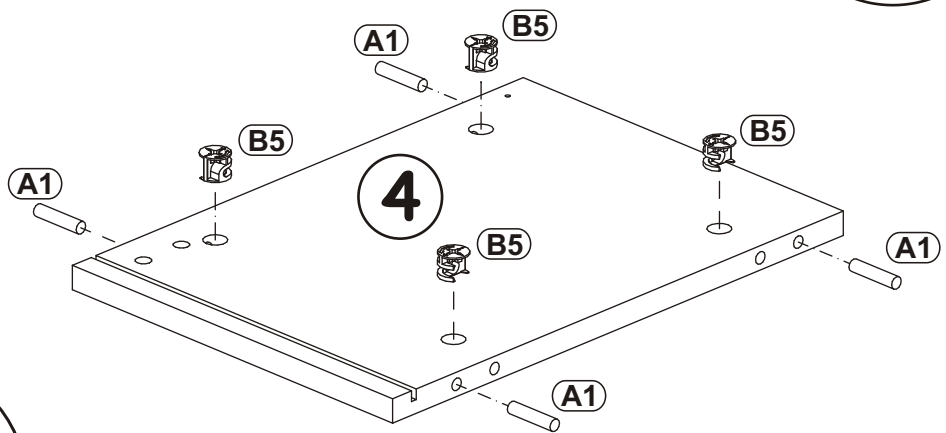

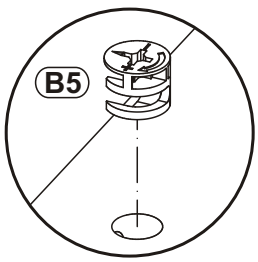

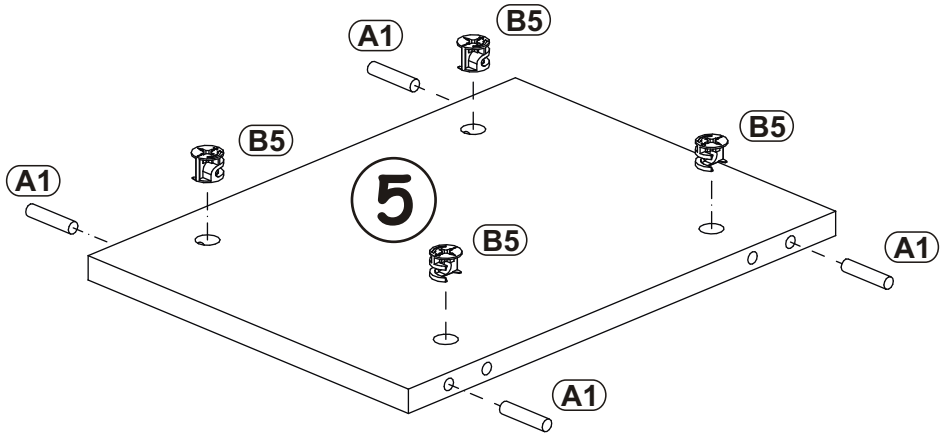

BINGO RTV 100

2

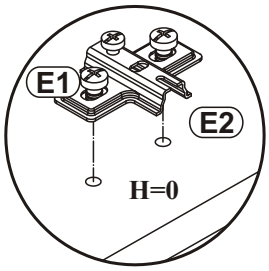

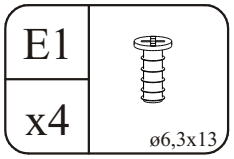

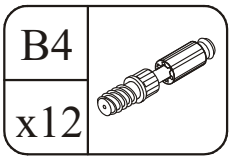

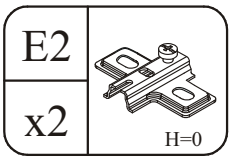

3

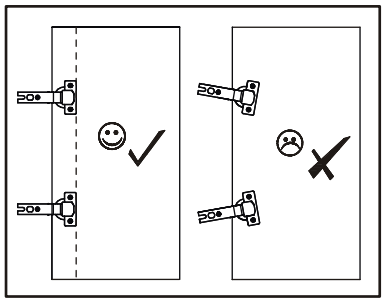

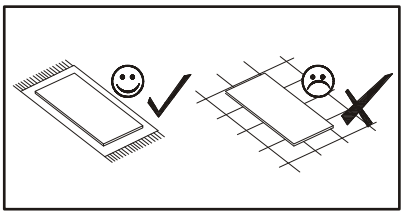

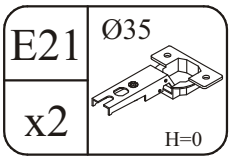

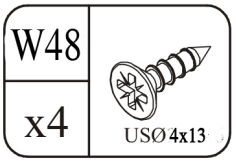

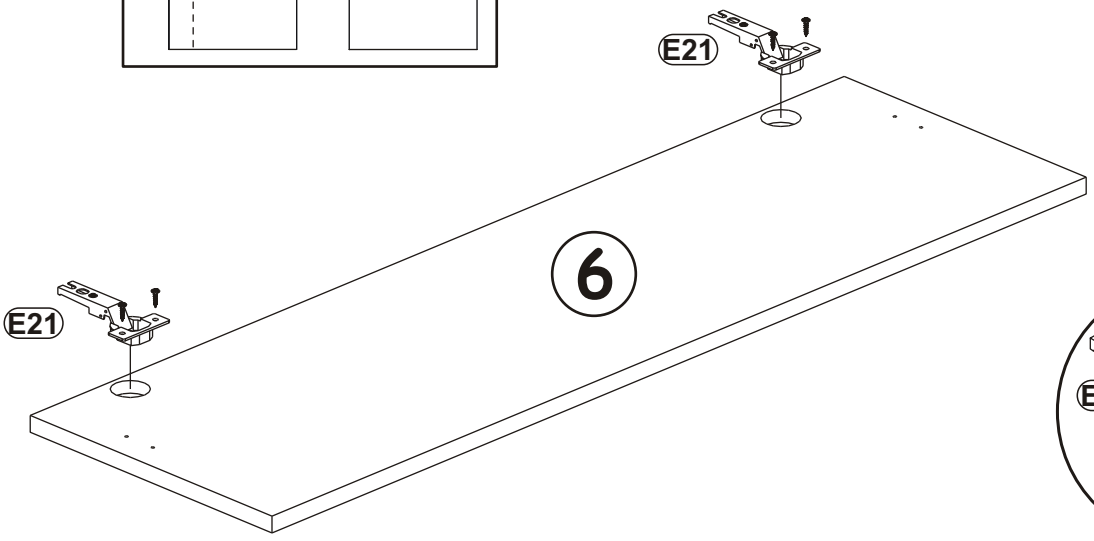

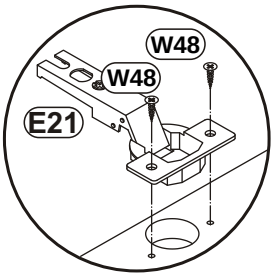

BINGO RTV 100

4

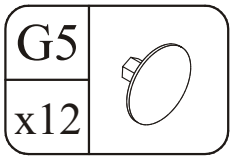

a)

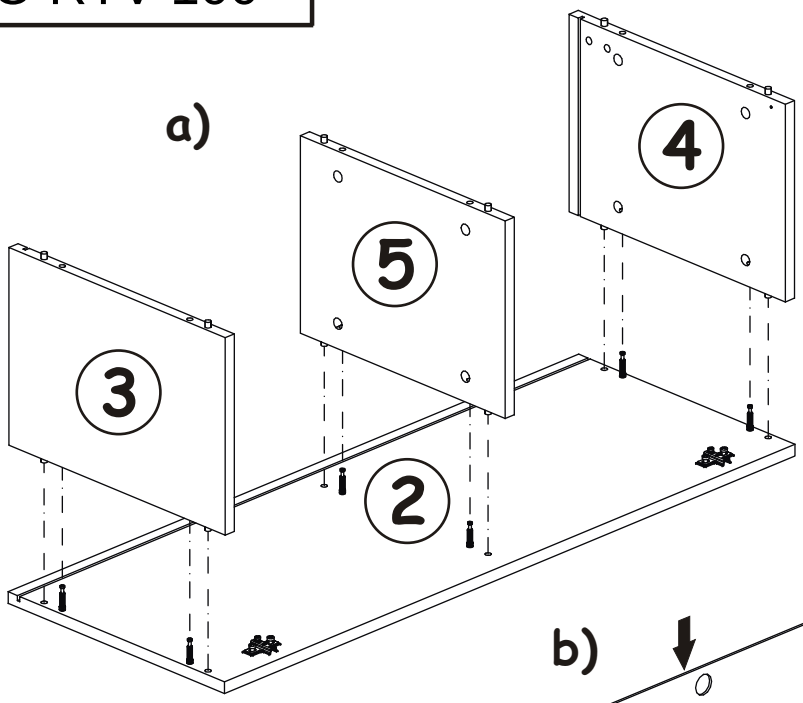

b)

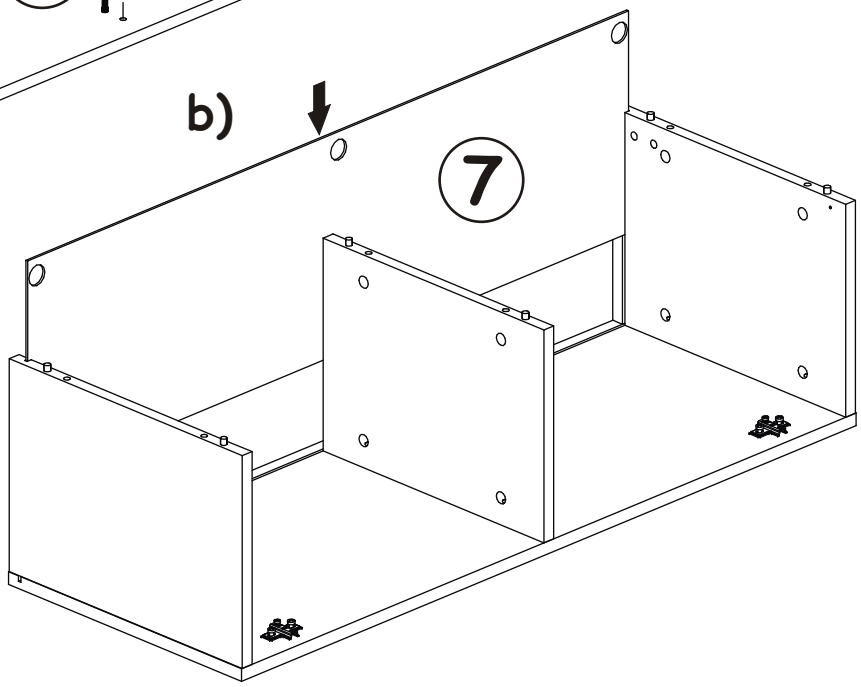

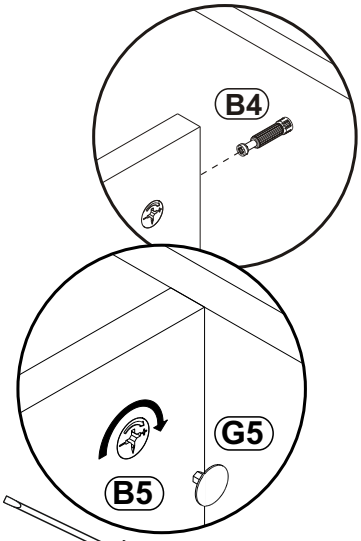

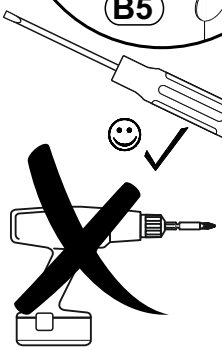

c)

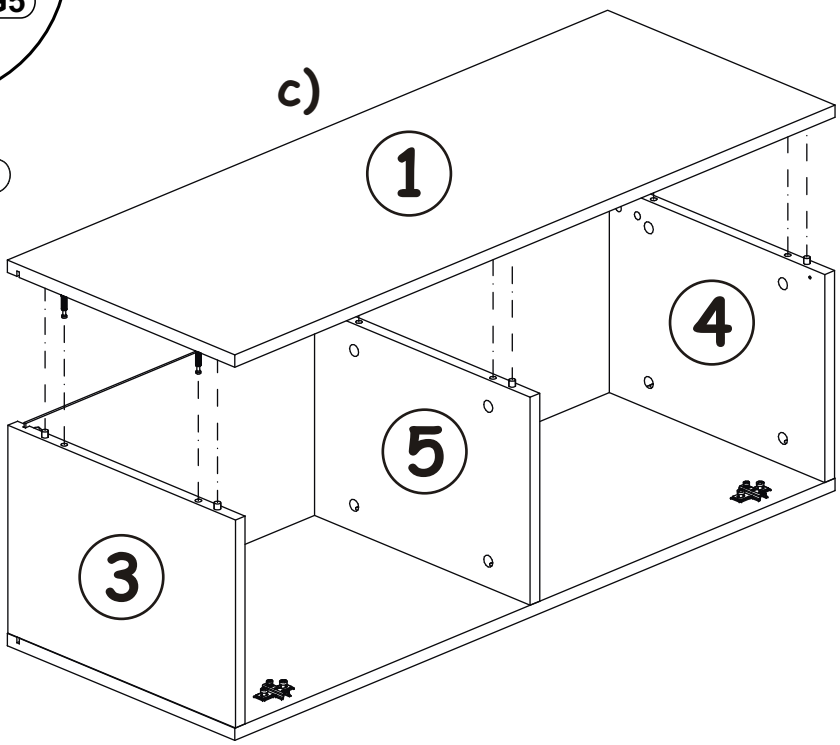

BINGO RTV 100

5

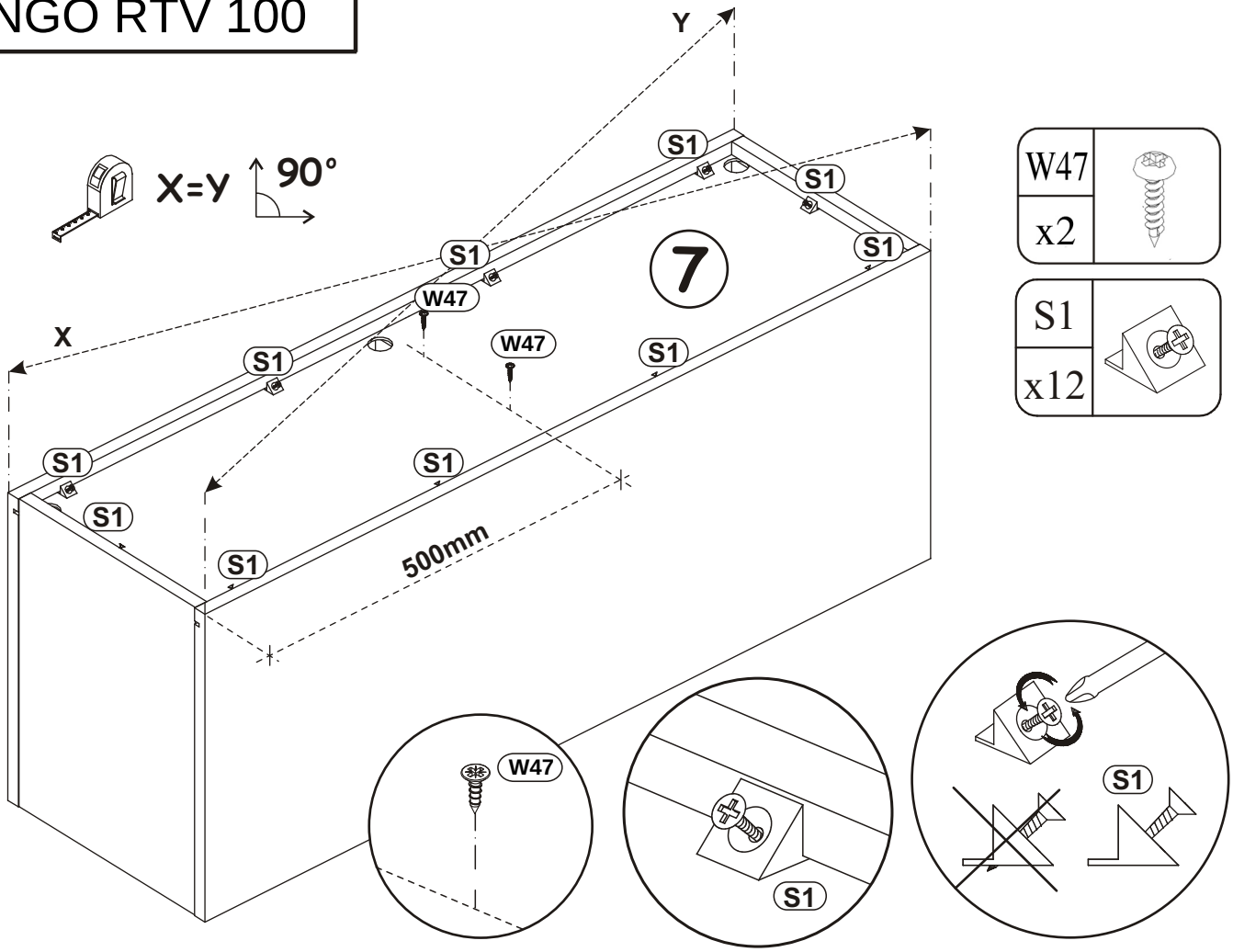

6

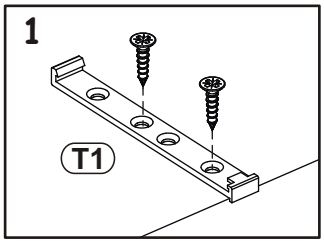

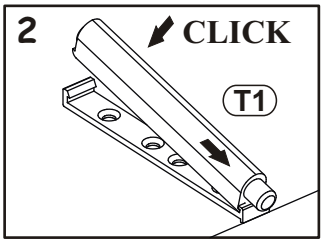

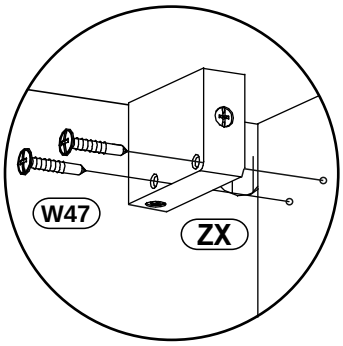

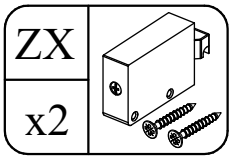

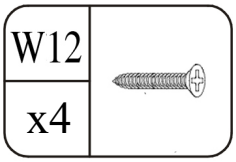

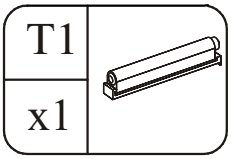

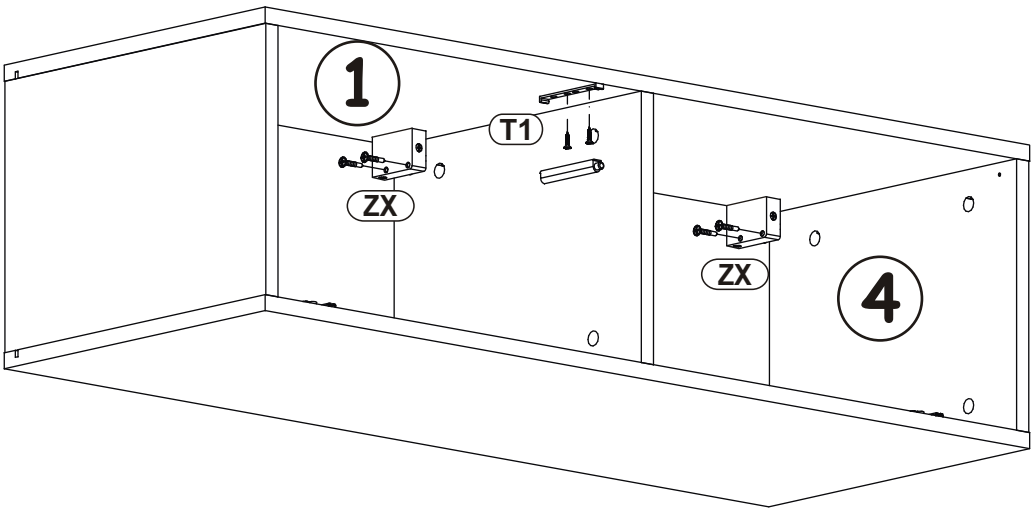

BINGO RTV 100

7

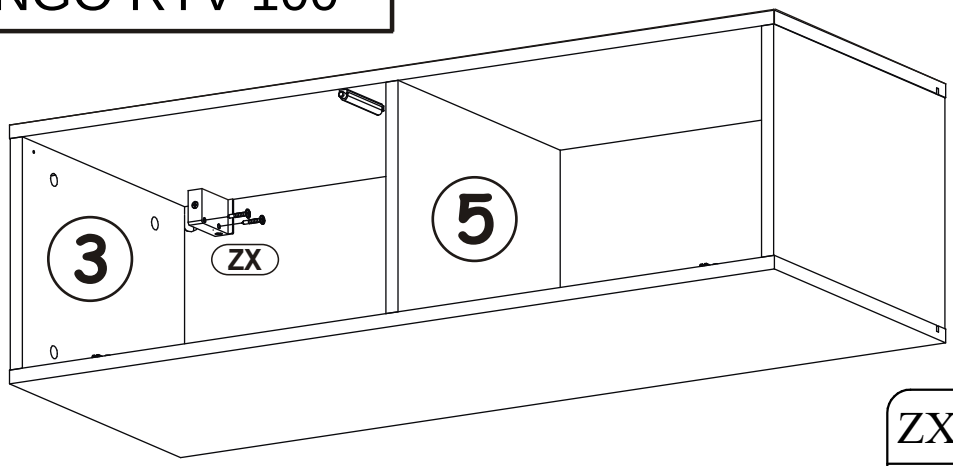

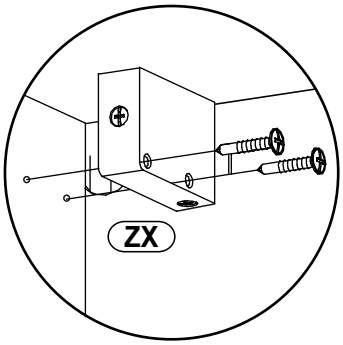

ZX	W12
x1	x2

8

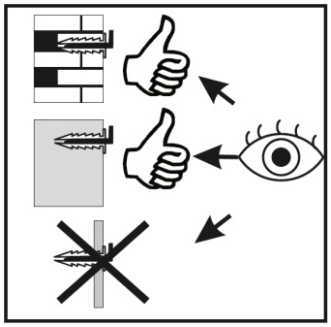

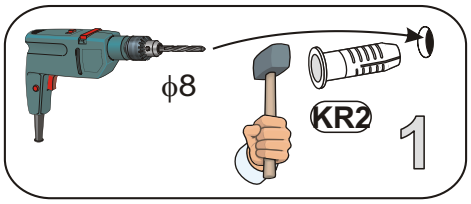

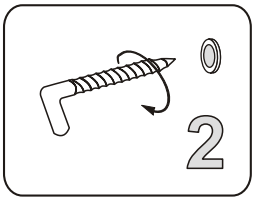

KR2
x3

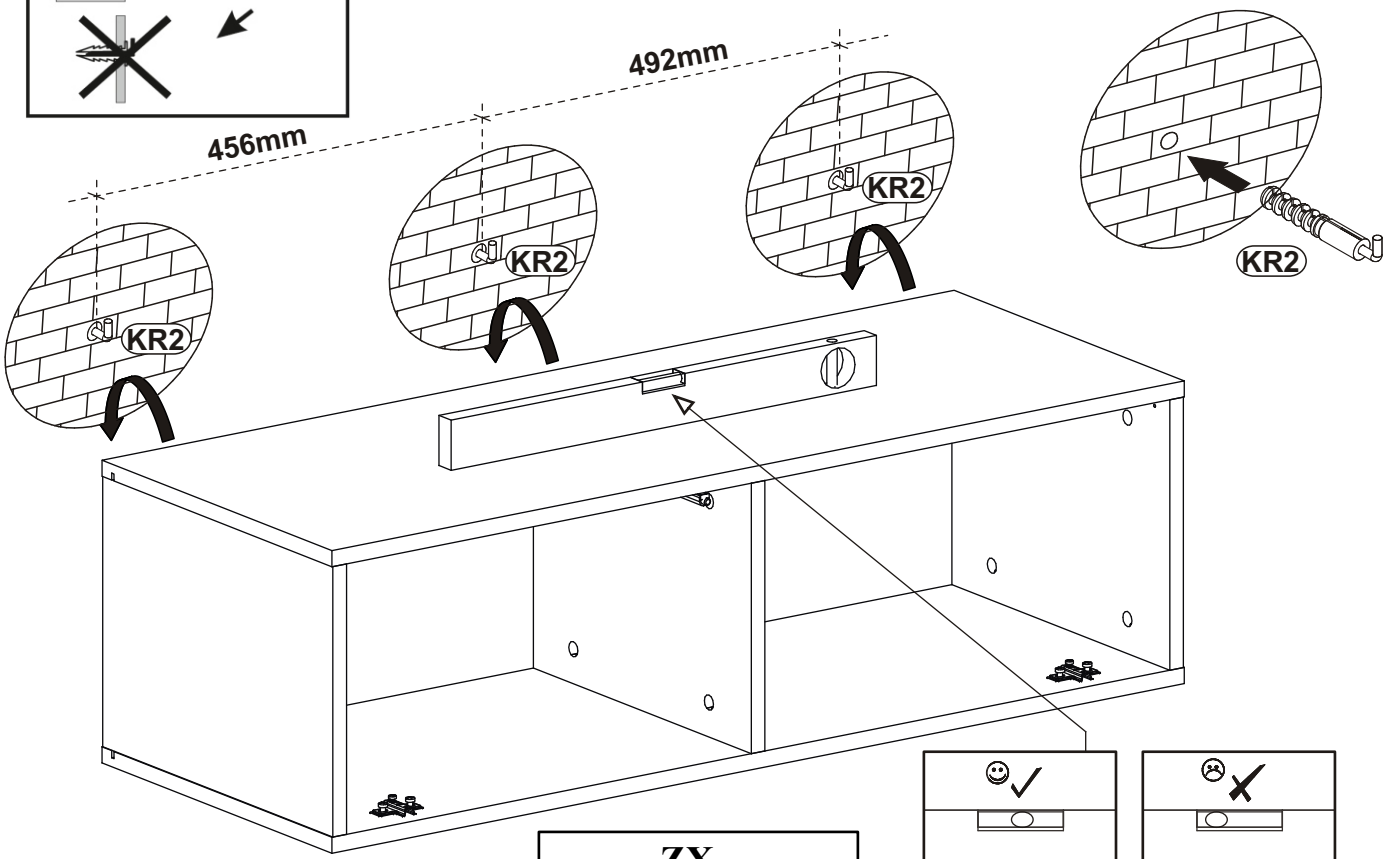

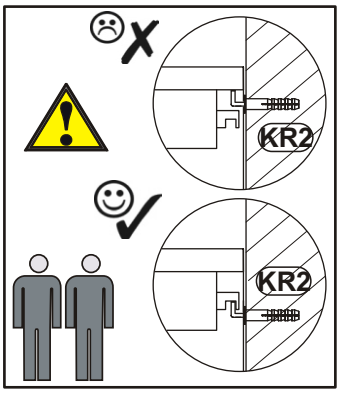

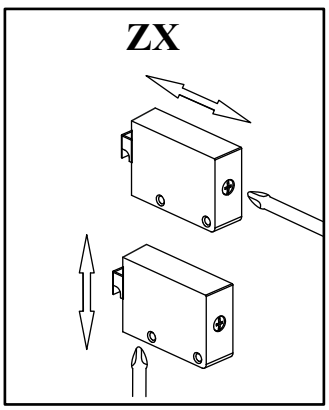

BINGO RTV 100

9

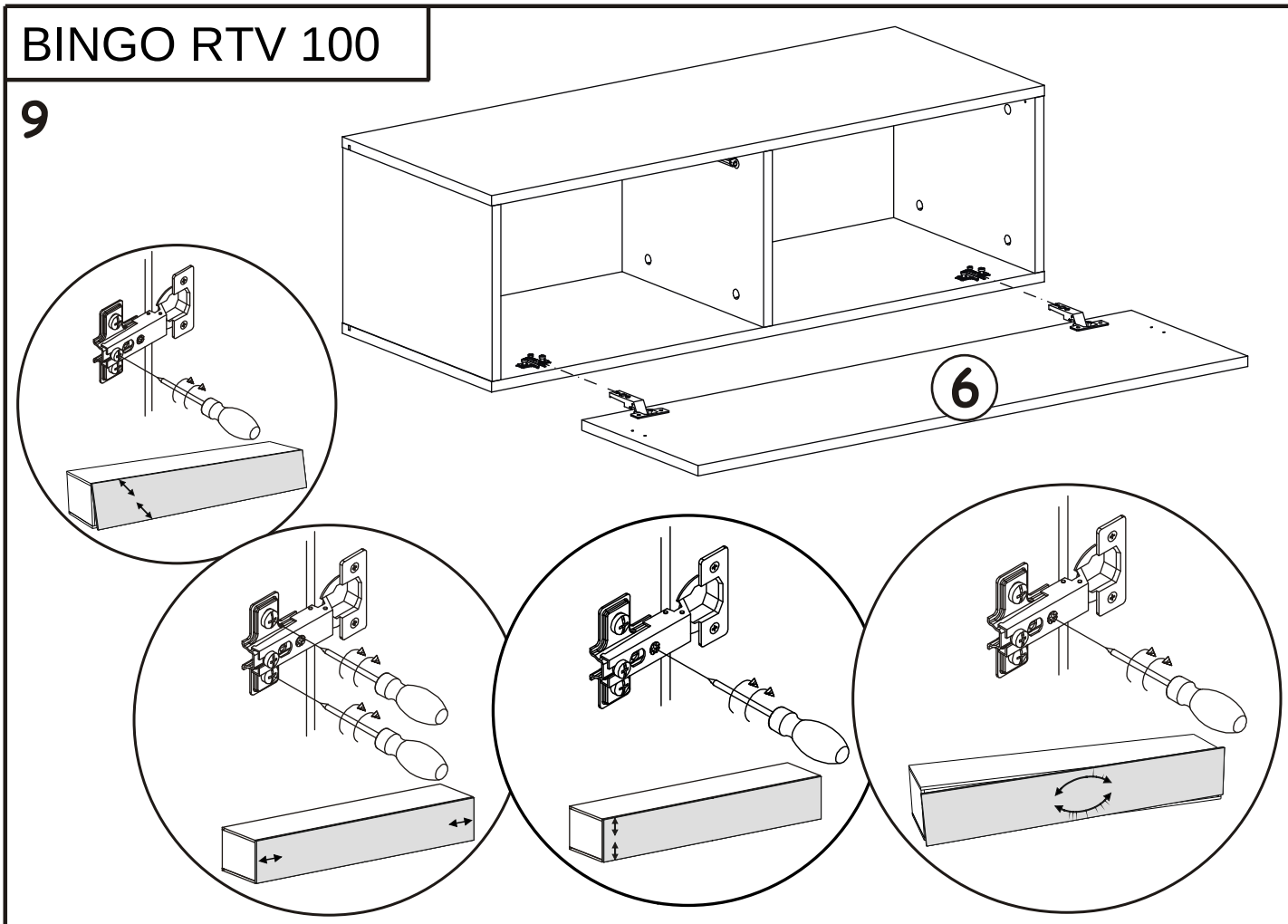

10

