RECAMI

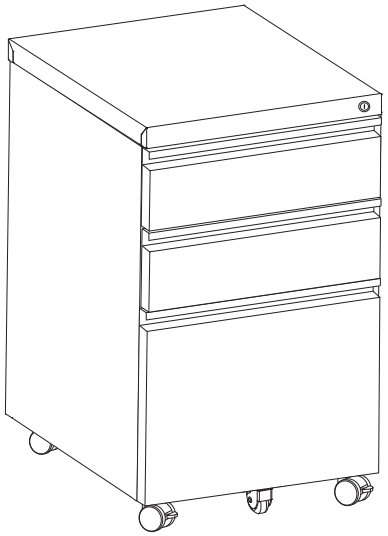

1/19

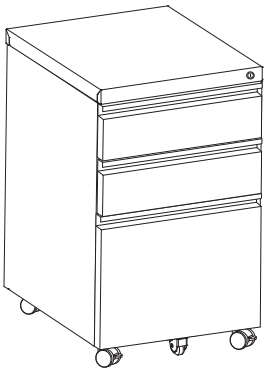

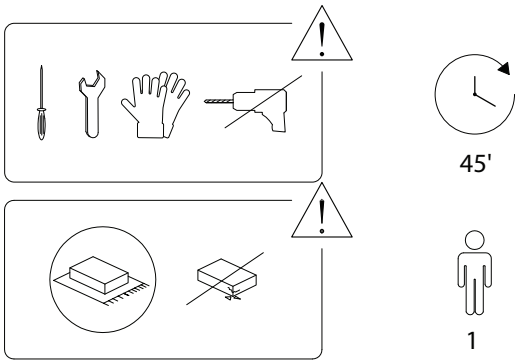

2/19

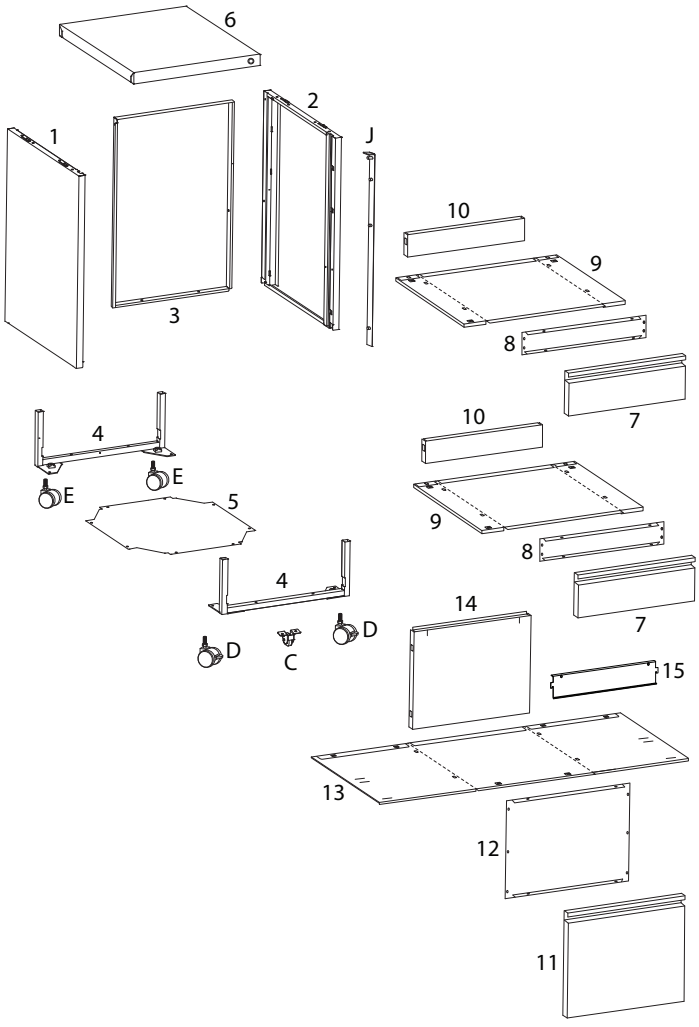

3/19

1  x 1	2  x 1	3  x 1
4 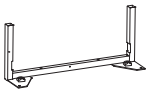 x 2	5  x 1	6 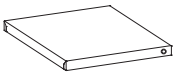 x 1
7  x 2	8  x 2	9 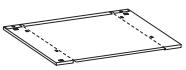 x 2
10  x 2	11 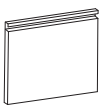 x 1	12 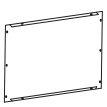 x 1
13  x 1	14  x 1	15  x 1

4/19

2673/RECAMI/270426/

A	B1	B2
M5 x 12		
x 38	x 1	x 1
B3	**C**	**D**
x 1	x 1	x 2
E	**F**	**G**
x 2	x 1	x 1
H	**I**	**J**
x 1	x 1	x 1
L	**R**	
x 3	x 3	

1

1	2	4
x 1	x 1	x 2

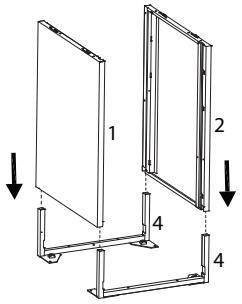

2

A	H
M5 x 12	
x 4	x 1

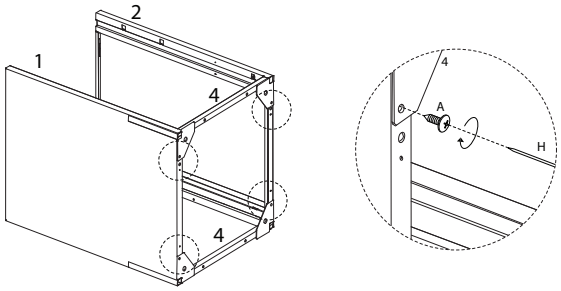

3

5
x 1

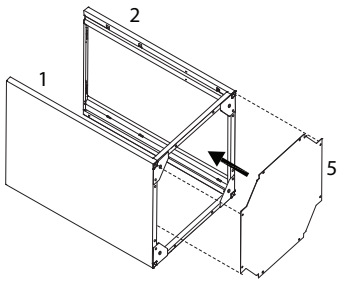

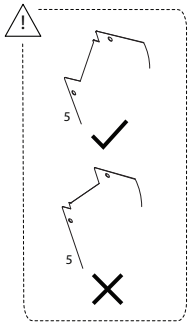

4

A	H
M5 x 12	
x 8	x 1

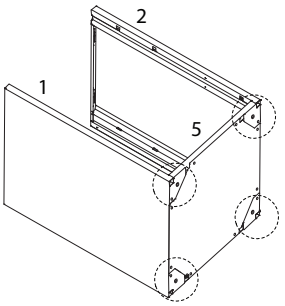

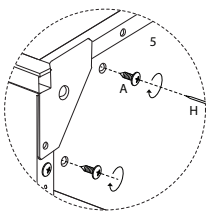

5

D	E	I
x 2	x 2	x 1

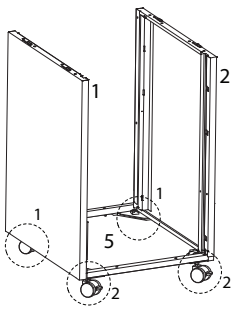

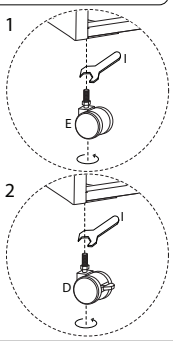

6

3	A	H
	M5 x 12	
x 1	x 6	x 1

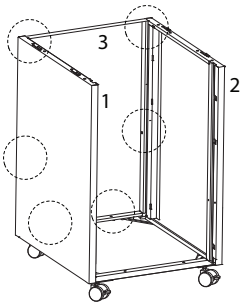

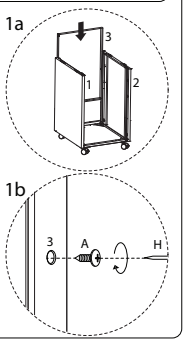

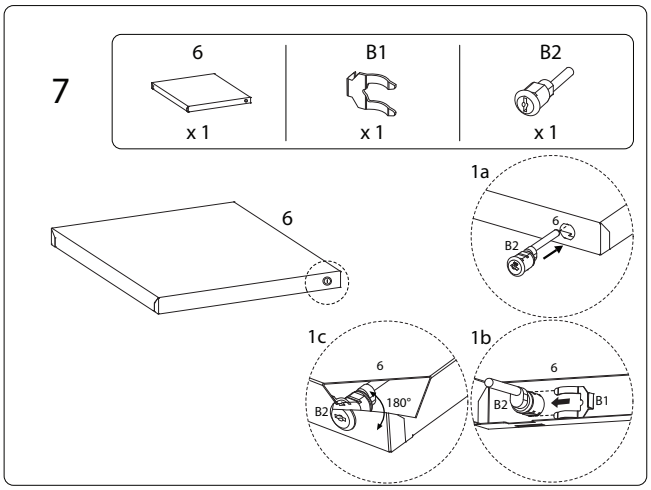

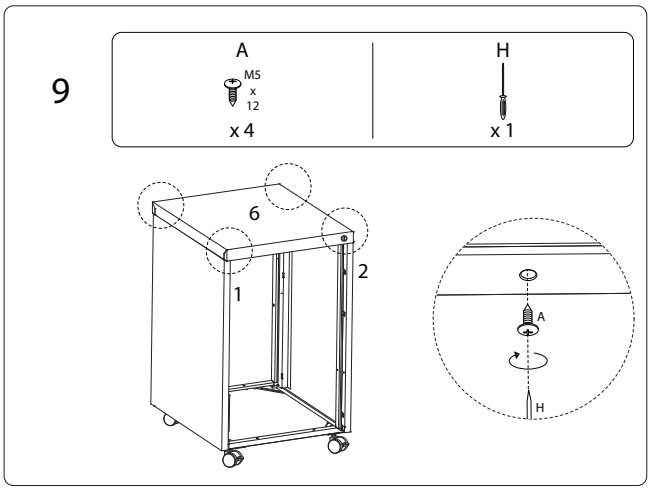

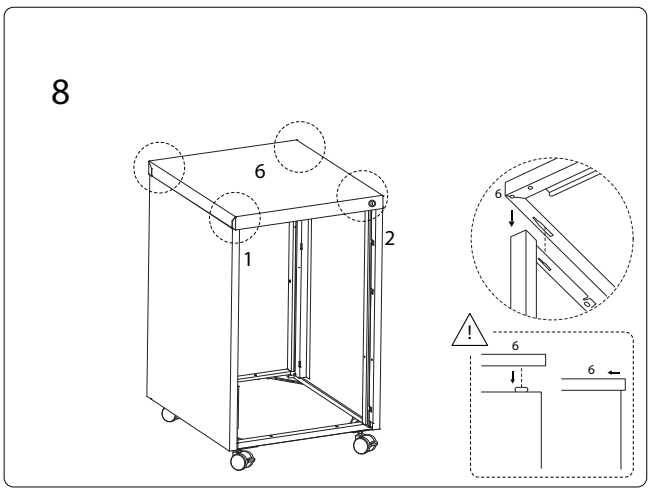

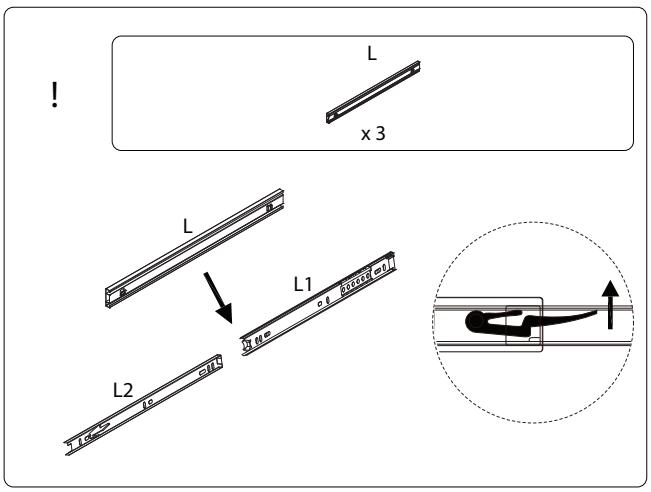

2673/RECAMI/270426/

2673/RECAMI/270426/

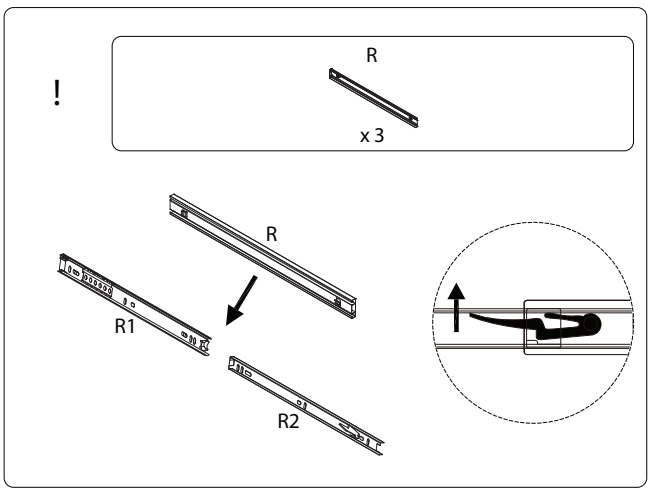

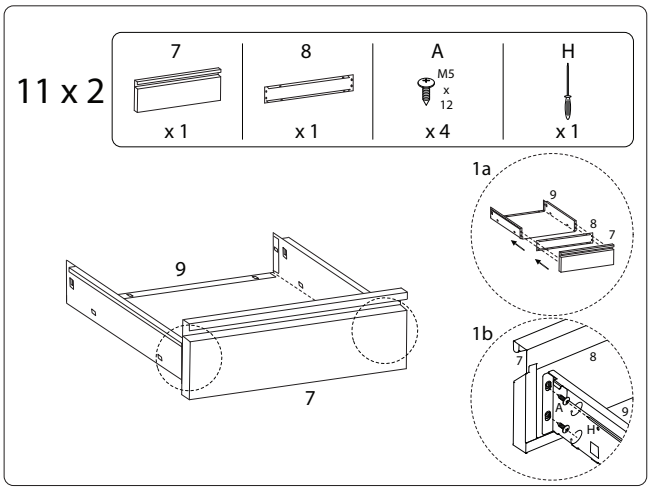

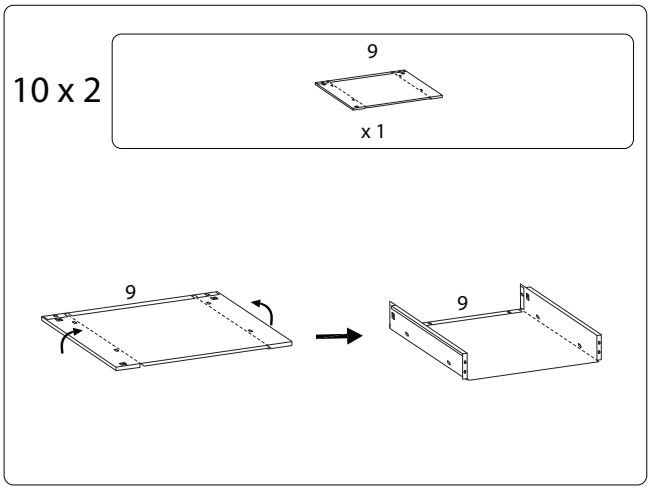

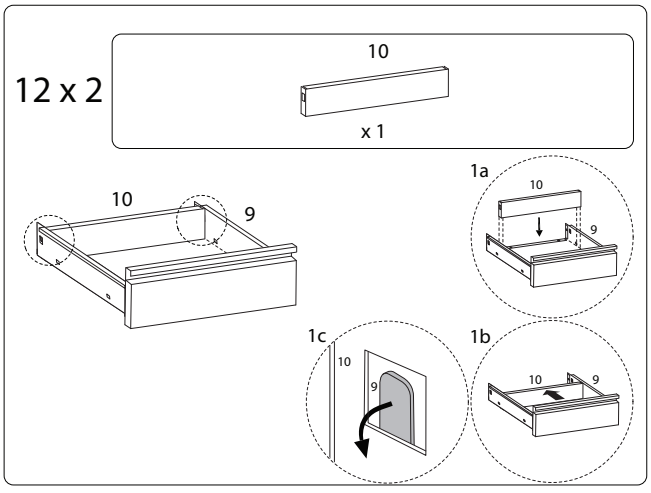

2673/RECAMI/270426/

2673/RECAMI/270426/

13 x 2

L2 x 1

R2 x 1

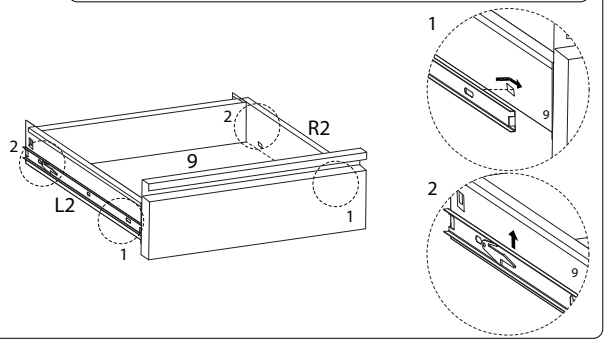

14

13 x 1

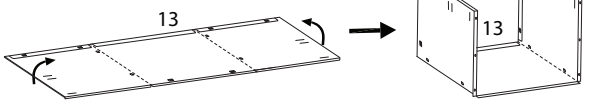

15

11 x 1

12 x 1

A M5 x 12 x 6

H x 1

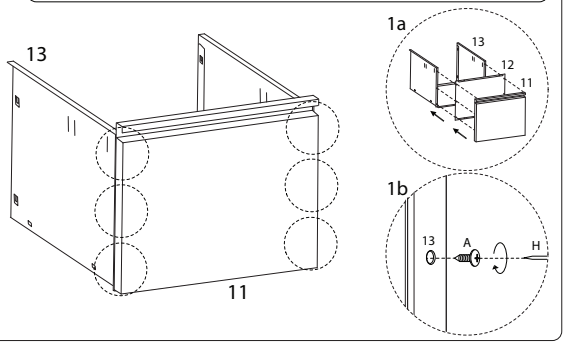

16

14 x 1

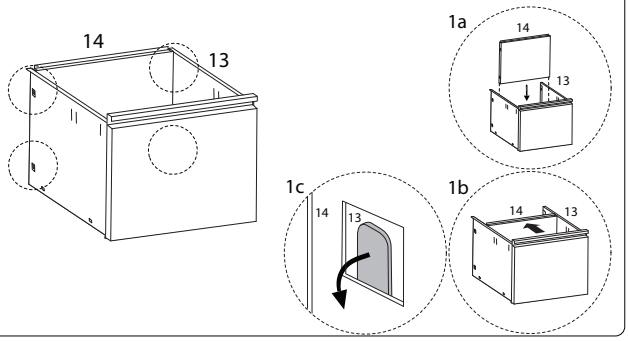

17

A M5 x 12 x 2

C x 1

H x 1

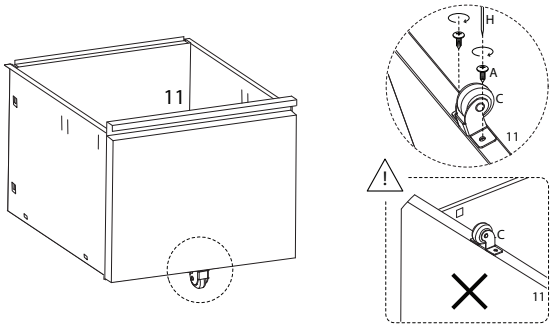

18

L2 x 1

R2 x 1

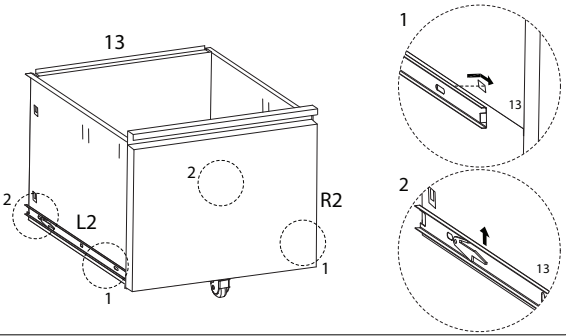

19

J x 1

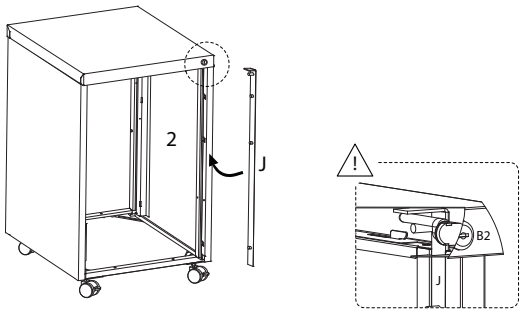

20

L1 x 3

R1 x 3

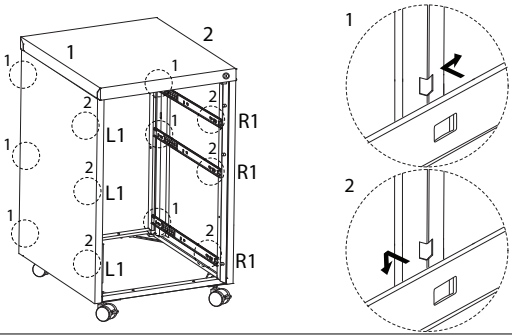

21

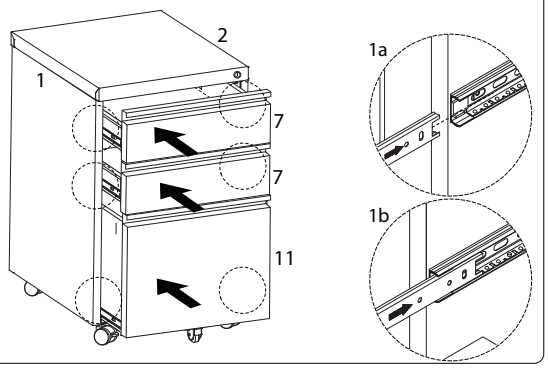

22

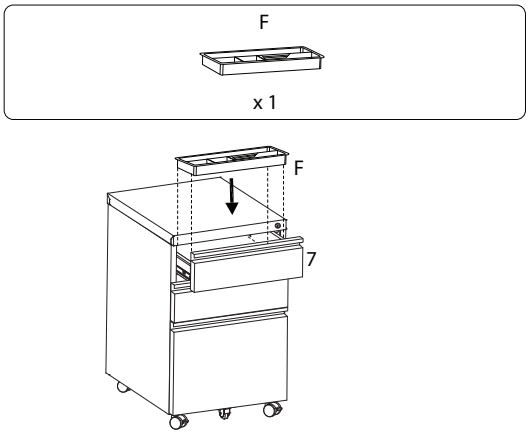

23

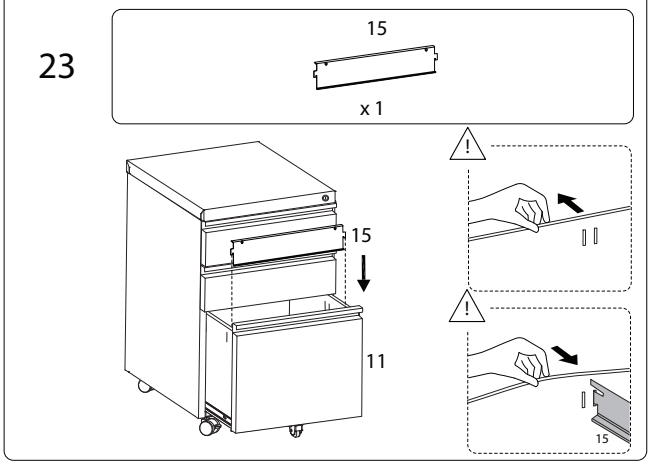

!

