DESTIN

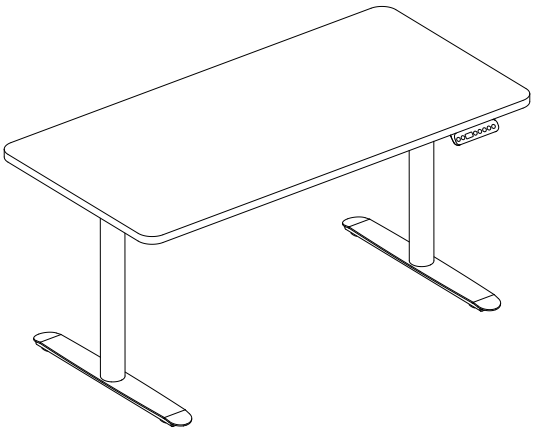

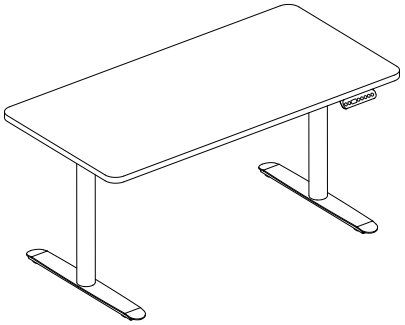

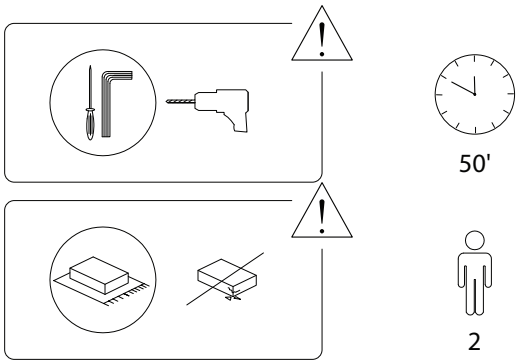

1/13

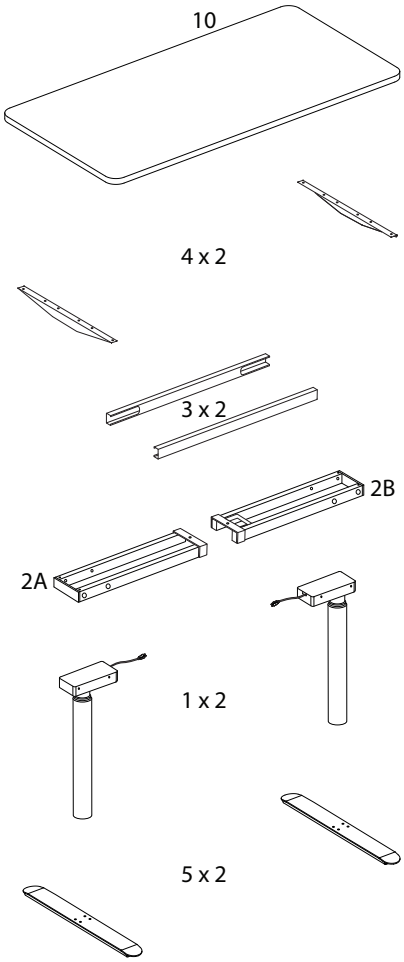

2/13

1  x 2	2A 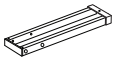 x 1	2B 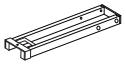 x 1
3  x 2	4  x 2	5 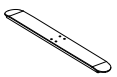 x 2
6  x 4	7 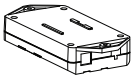 x 1	8  x 1
9A  x 1	9B  x 1	10 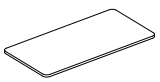 x 1

3/13

A	B	C
M6 x 12	M6 x 16	M6 x 8
x 8	x 8	x 4
D	**E**	**F**
M5 x 18	M4 x 12	M8 x 6
x 10	x 2	x 8
G	**H**	**I**
		
x 10	x 5	x 1

!

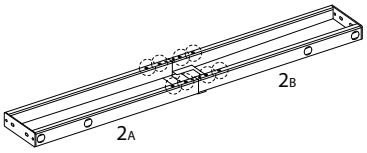

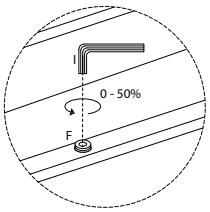

1

2_A	2_B	3
x 1	x 1	x 1

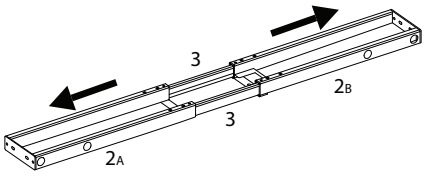

2

1
x 2

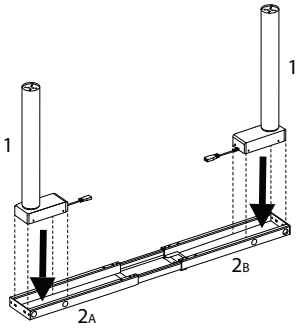

3

A	I
M6 x 12	
x 8	x 1

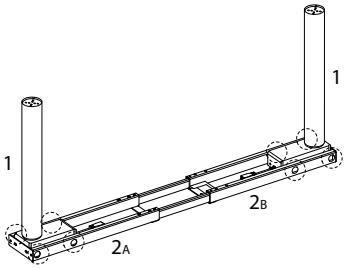

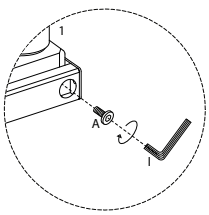

4

5	B	I
	M6 x 16	
x 2	x 8	x 1

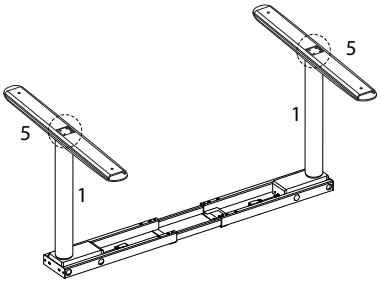

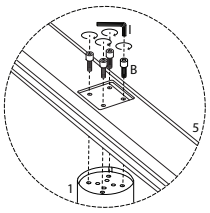

5

6
x 4

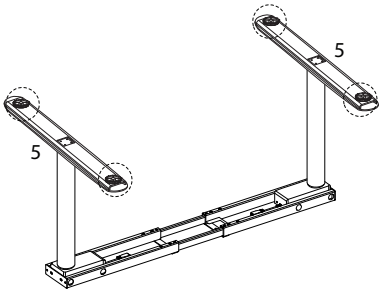

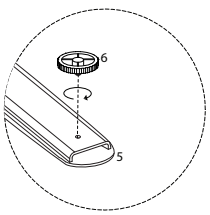

6

4 x 2 | C M6 x 8 x 4 | I x 1

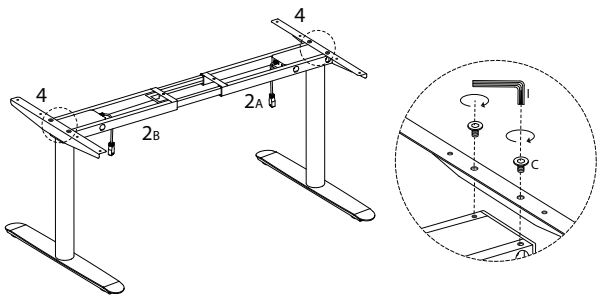

8

10 x 1 | D M5 x 18 x 10

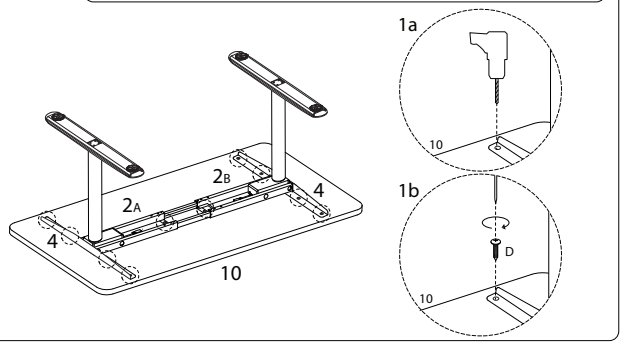

7

G x 10

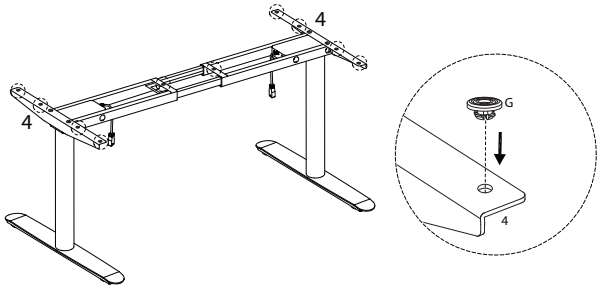

8/13

9

F M8 x 6 x 8 | I x 1

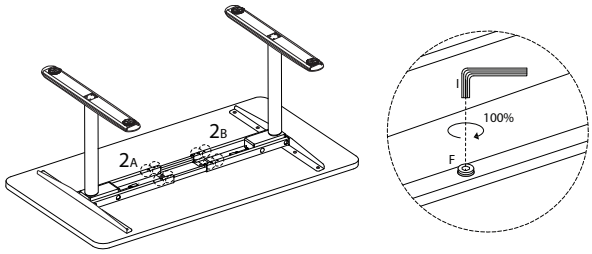

9/13

10

7 x 1

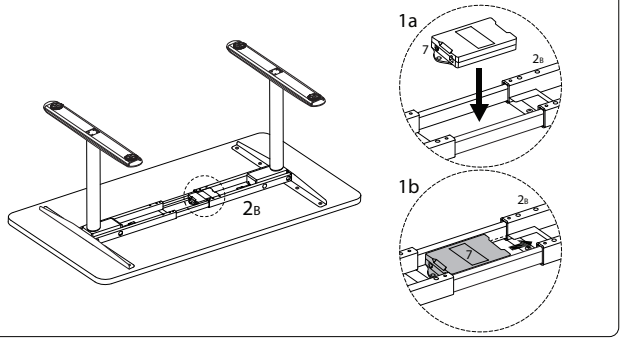

12

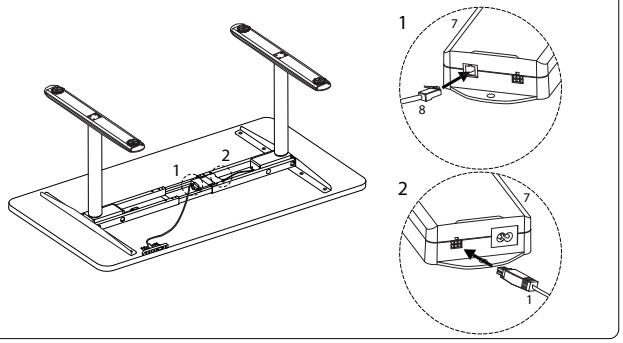

11

8 x 1 | E M4 x 12 x 2

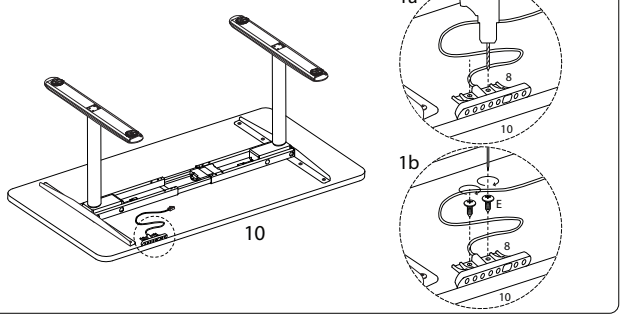

10/13

13

9B x 1

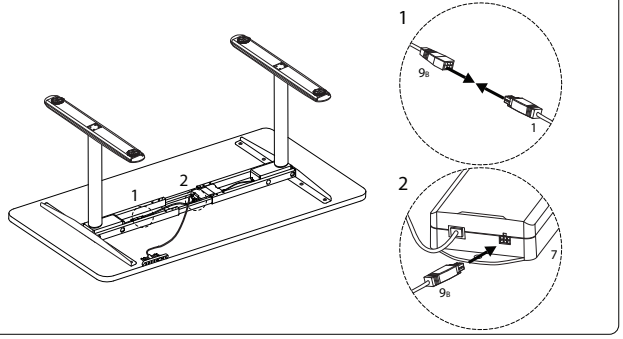

11/13

14

9A

x 1

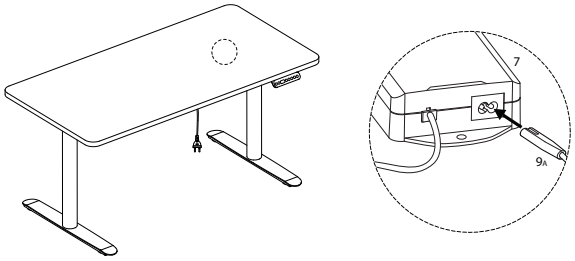

15

H

x 2

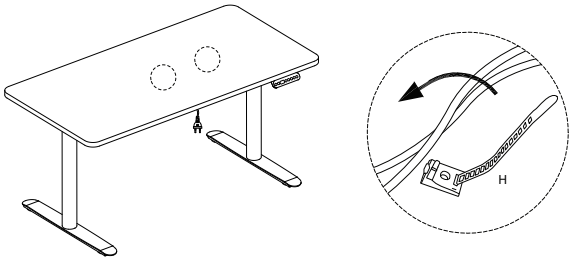

!

