QUEBEC

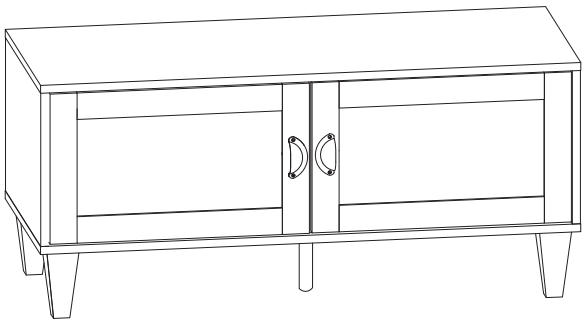

1/12

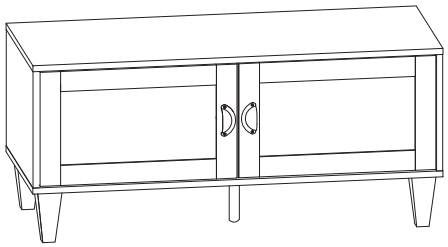

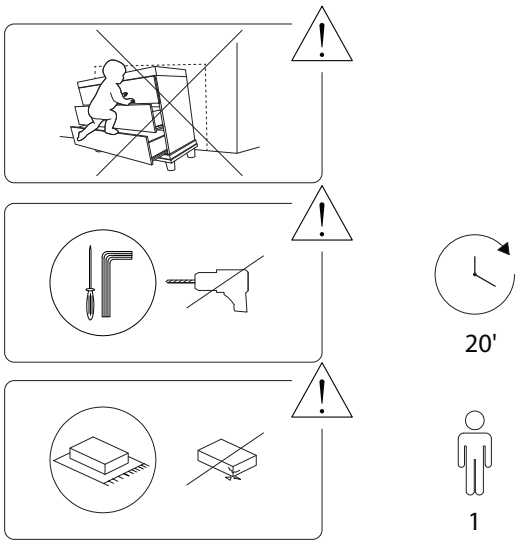

2/12

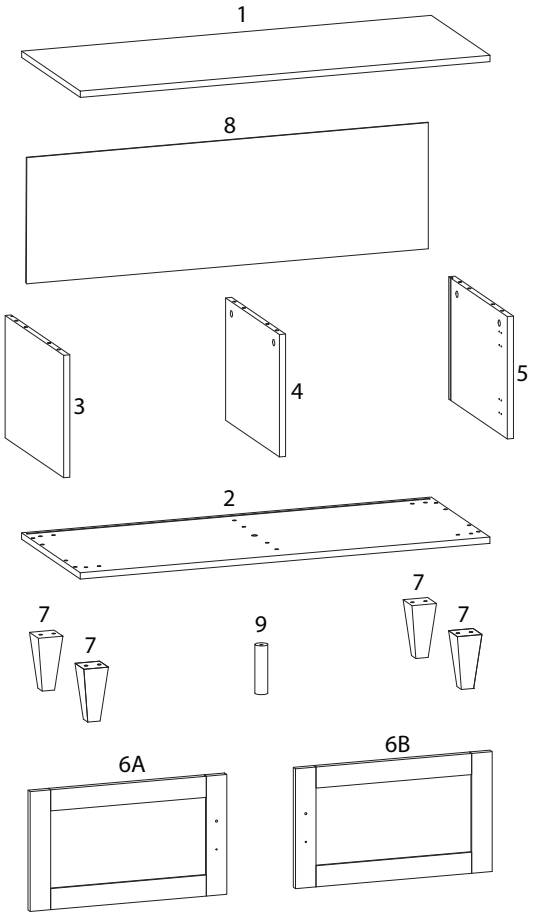

3/12

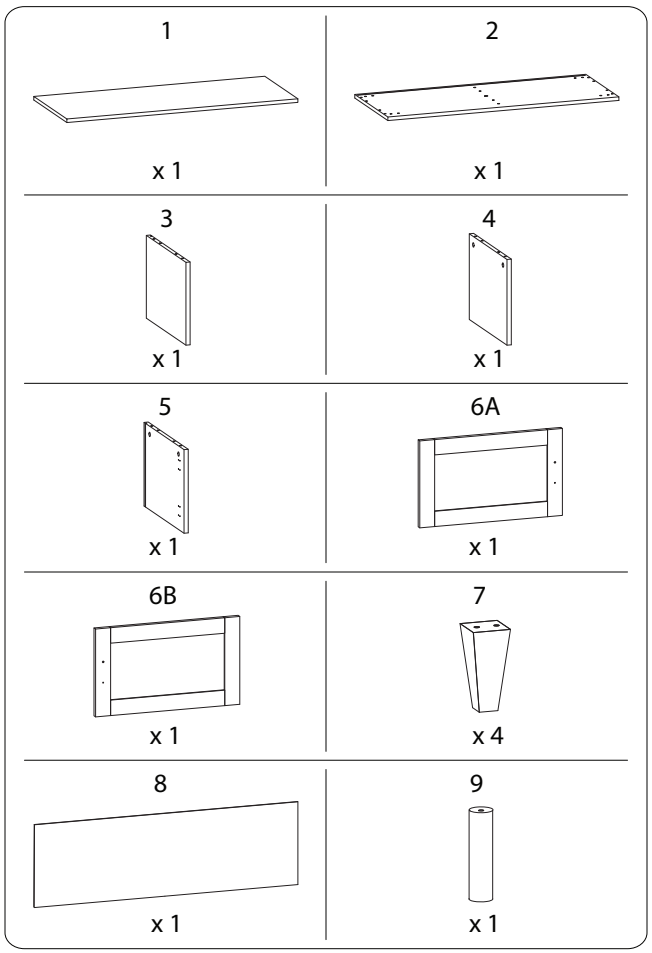

4/12

1794/QUEBEC/170726/

A	B
 x 6	 x 6
C	D
 x 12	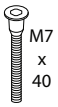 x 6
E	F
 x 28	 x 9
G	H	I1
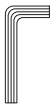 x 1	 x 2	 x 4
I2	J	K
 x 4	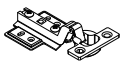 x 4	 x 5

5/12

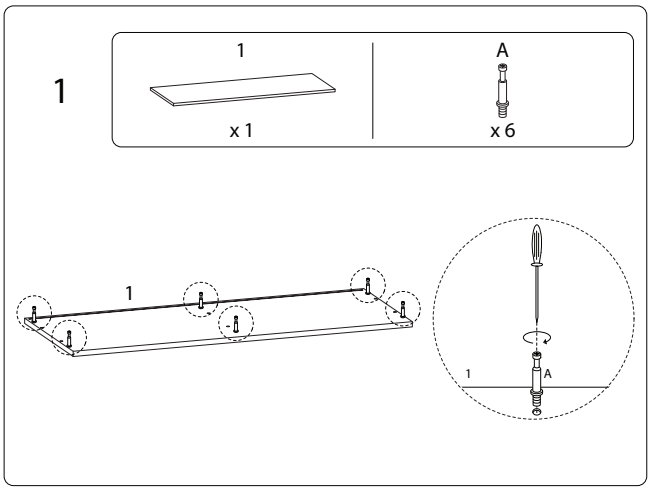

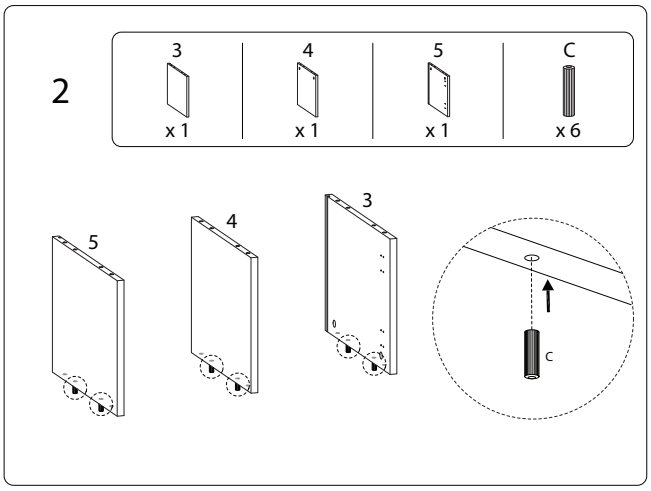

6/12

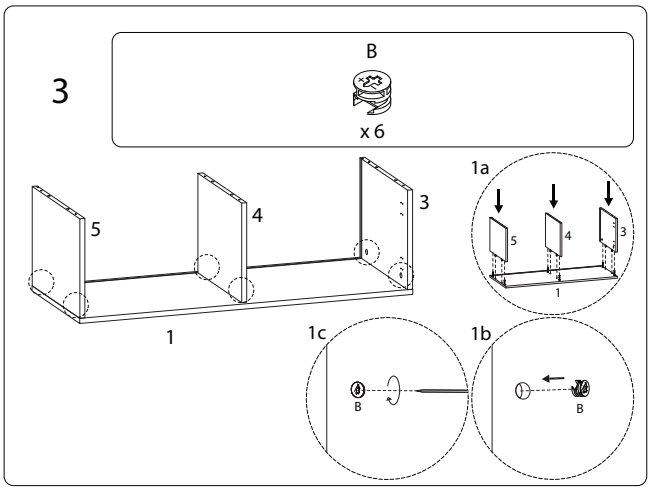

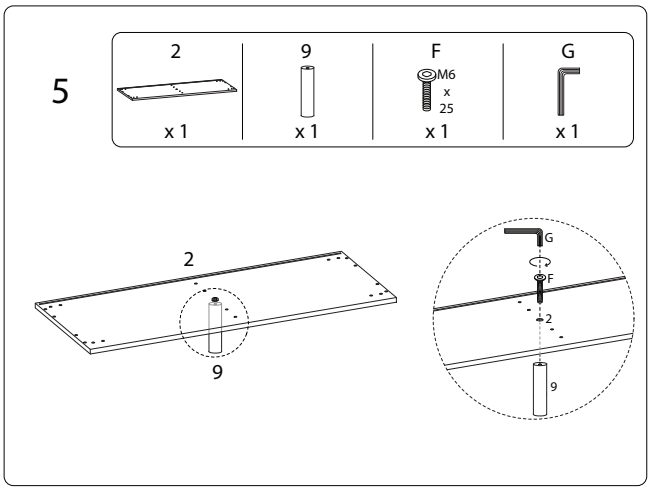

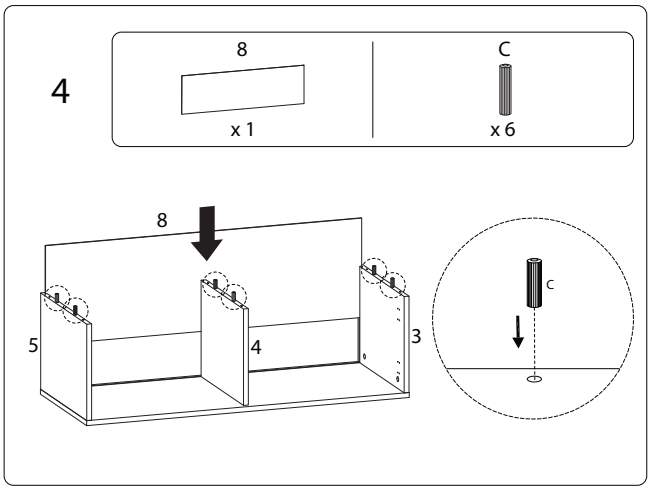

7/12

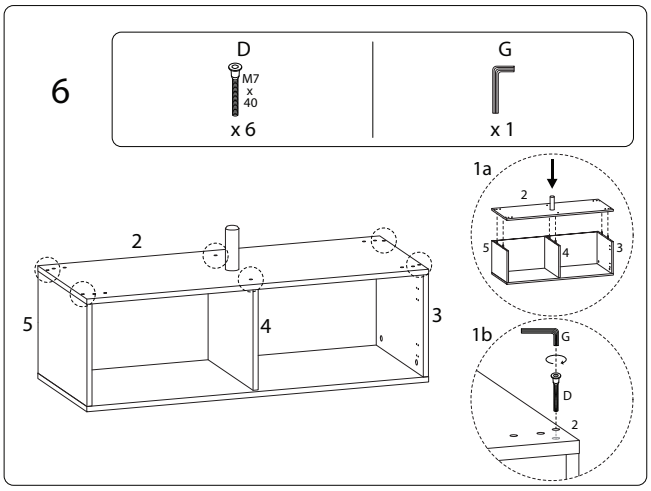

8/12

7

7	F	G
x 4	M6 x 25 x 8	x 1

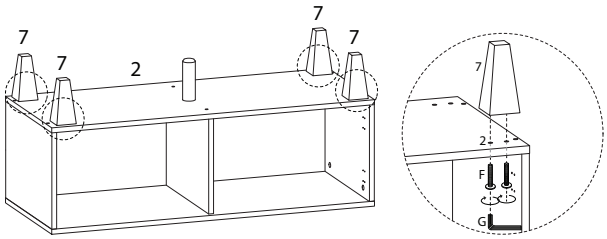

8

K
x 5

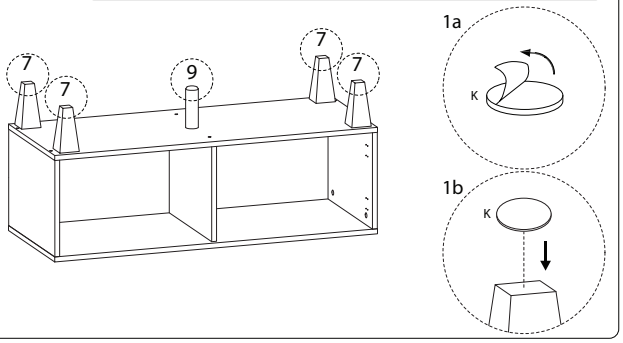

9

6A	6B	E	J
x 1	x 1	M3.5 x 14 x 8	x 4

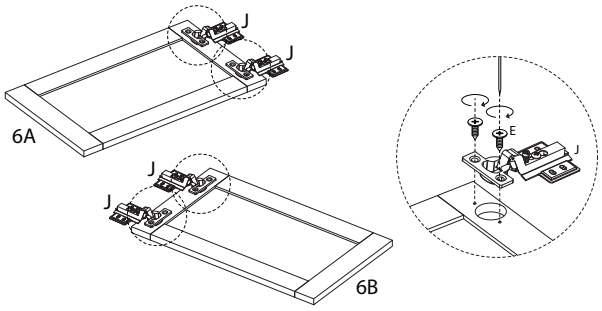

10

E
M3.5 x 14 x 16

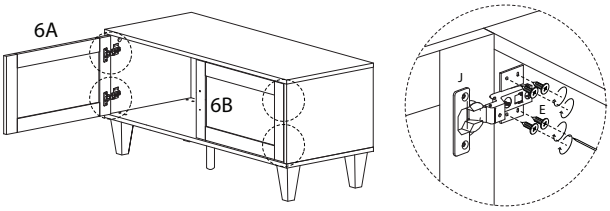

11

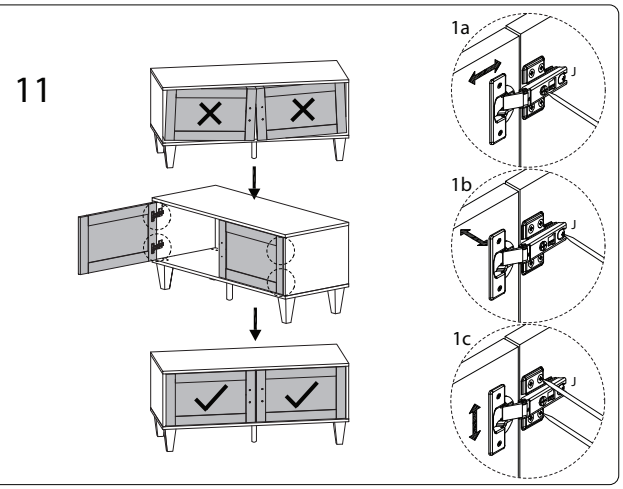

12

I1	I2
x 4	M3.5 x 14 x 4

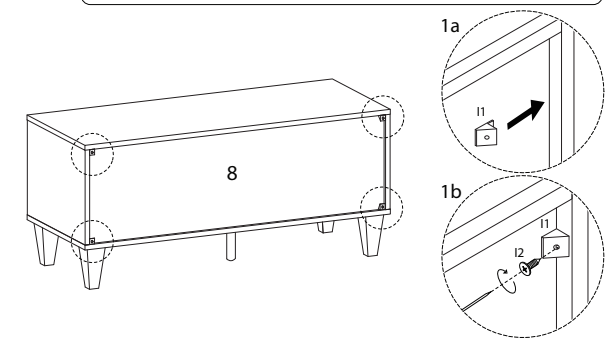

13

E	H
M3.5 x 14 x 4	x 2

