ASSEMBLY INSTRUCTION

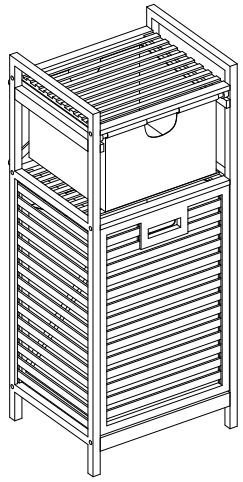

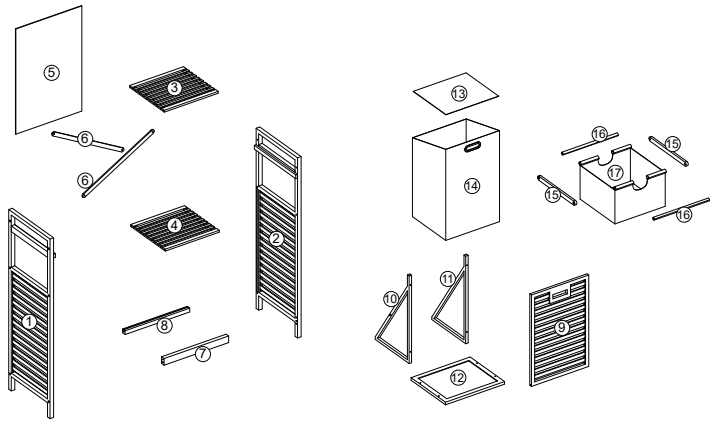

a x 16	b x 8	c x 2	d x 2	e x 1	f x 4
					

1

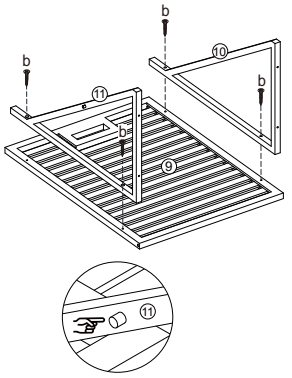

2

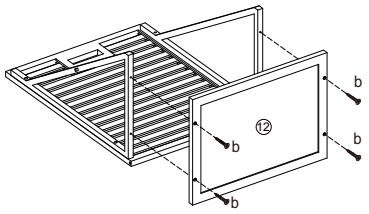

3

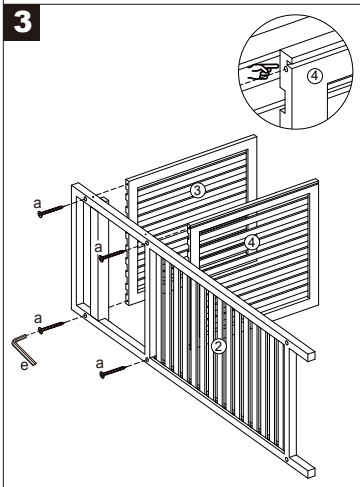

4

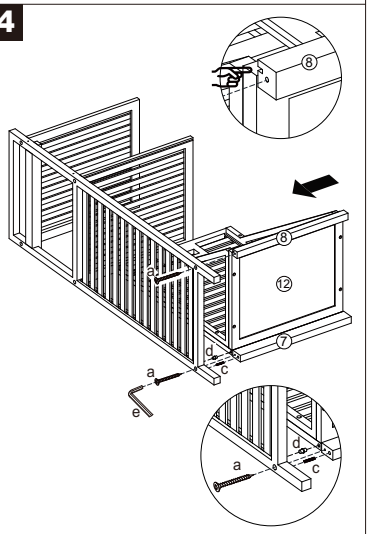

5

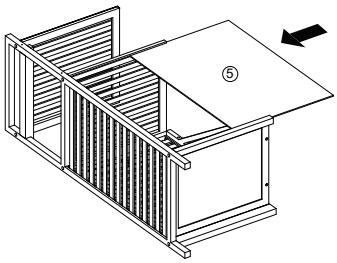

6

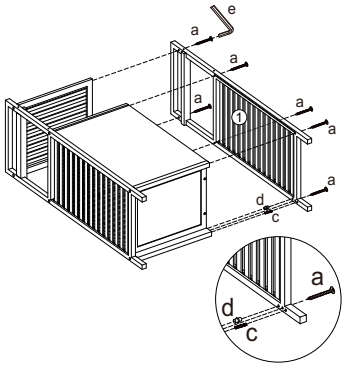

7

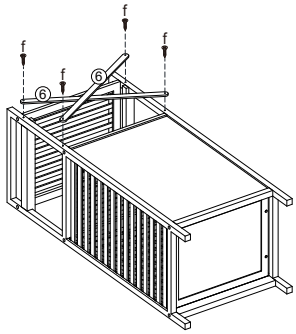

8

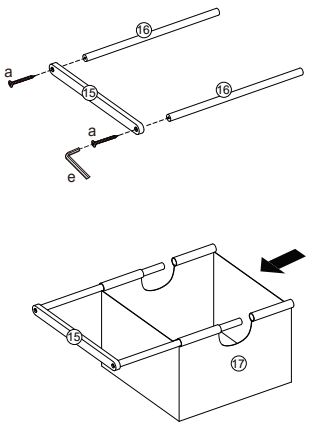

9

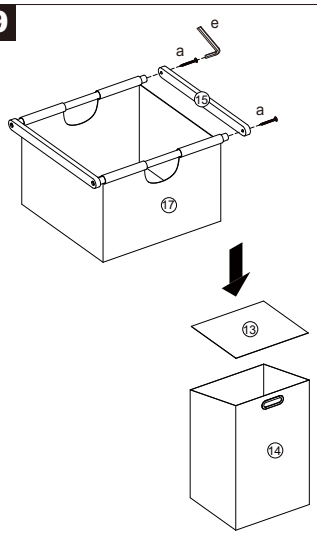

10

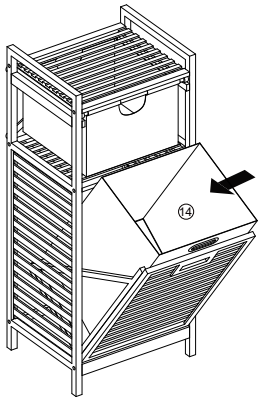

11

