VALLEY

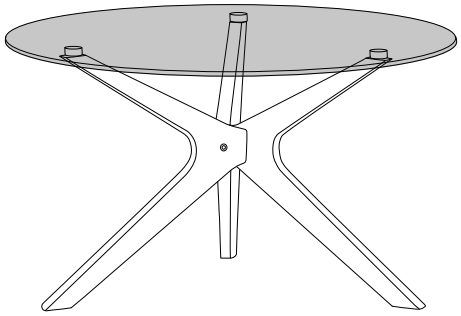

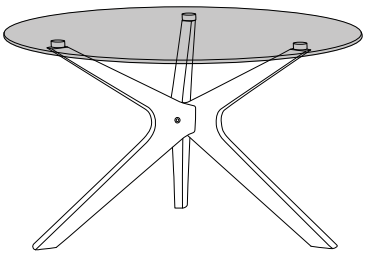

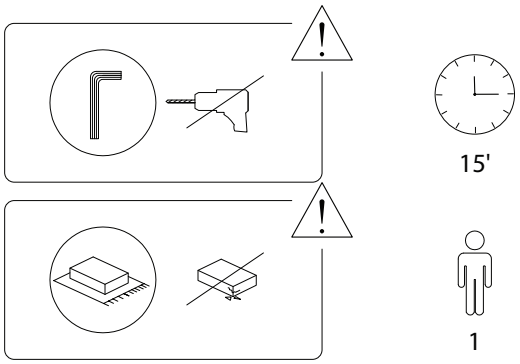

Beliani

1/4

Beliani

810/VALLEY/071123/

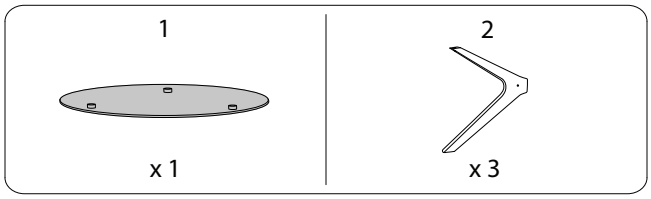

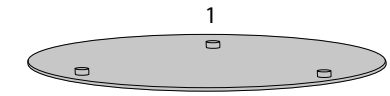

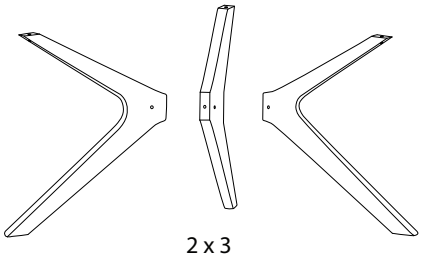

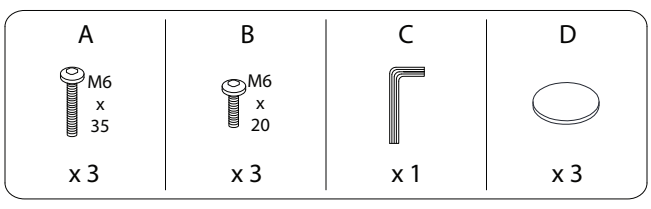

2/4

Beliani

810/VALLEY/071123/

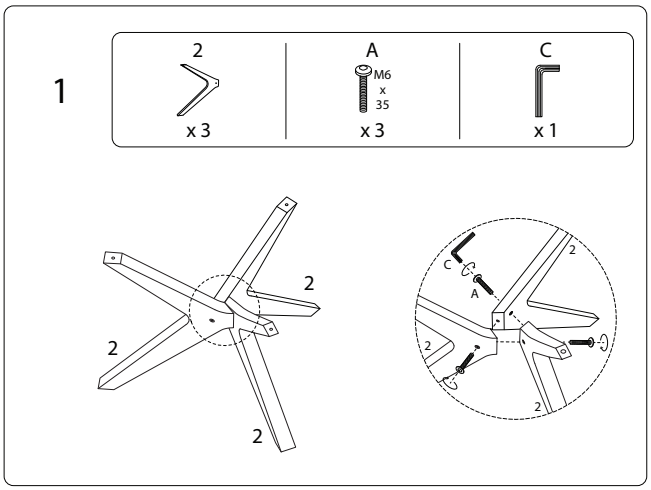

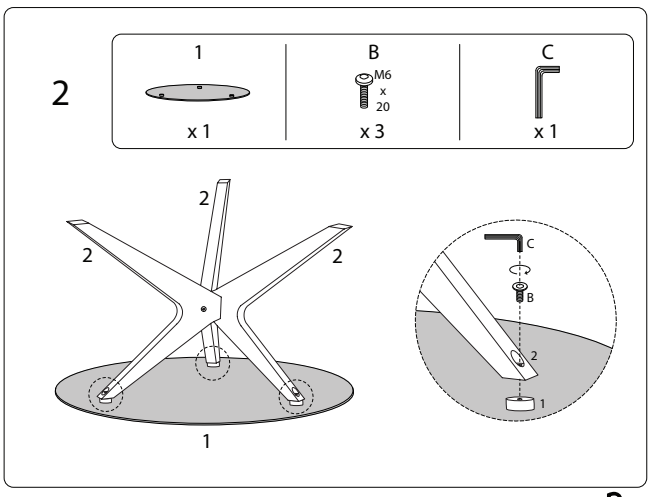

3/4

Beliani

810/VALLEY/071123/

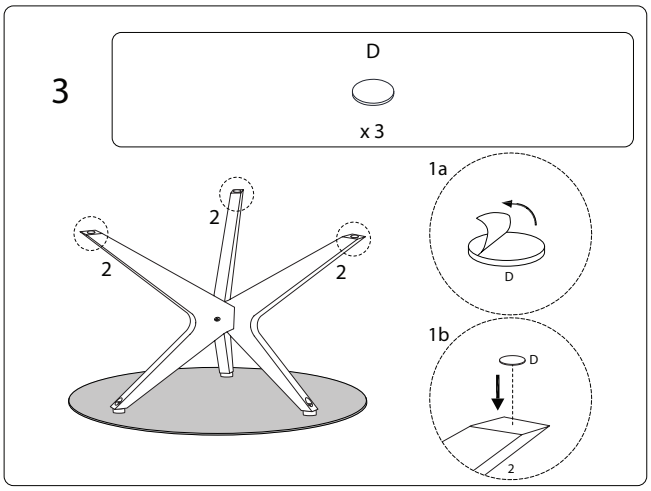

Beliani
810/VALLEY/071123/