

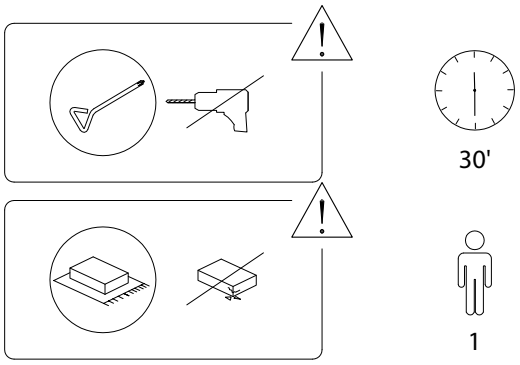
30'
1

1/5

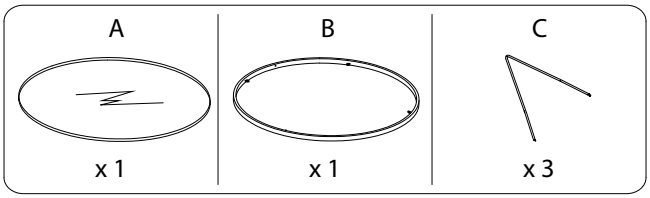
A
x 1
B
x 1
C
x 3

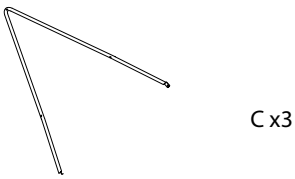
C x3

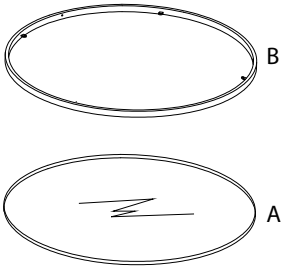
B
A

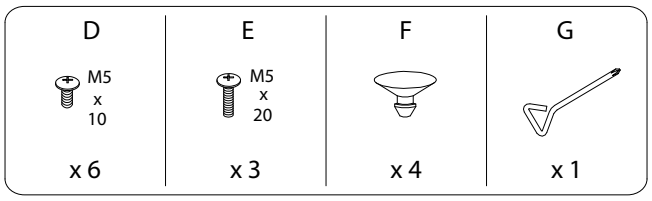
D
M5 x 10
x 6
E
M5 x 20
x 3
F
x 4
G
x 1

2/5

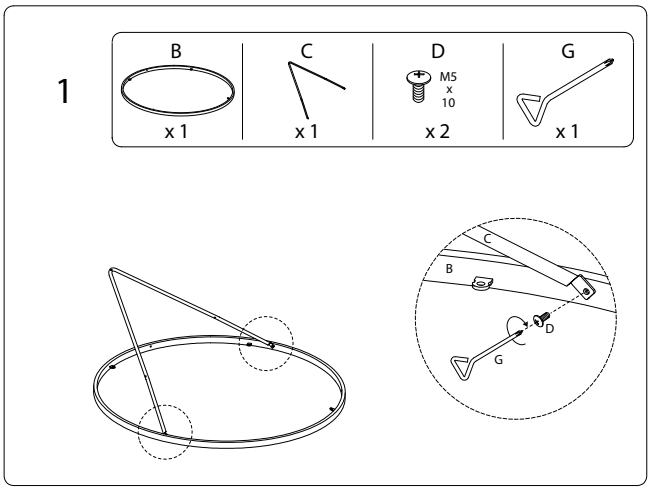
1
B
x 1
C
x 1
D
M5 x 10
x 2
G
x 1
C
B
D
G

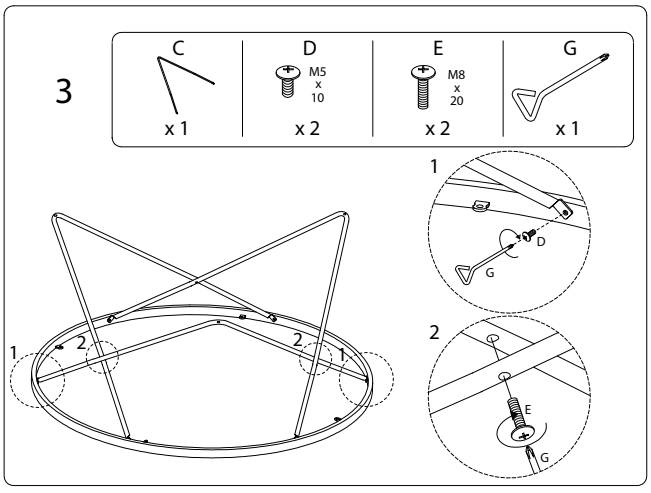
3
C
x 1
D
M5 x 10
x 2
E
M8 x 20
x 2
G
x 1
1
2
1
2
1
D
G
2
E
G

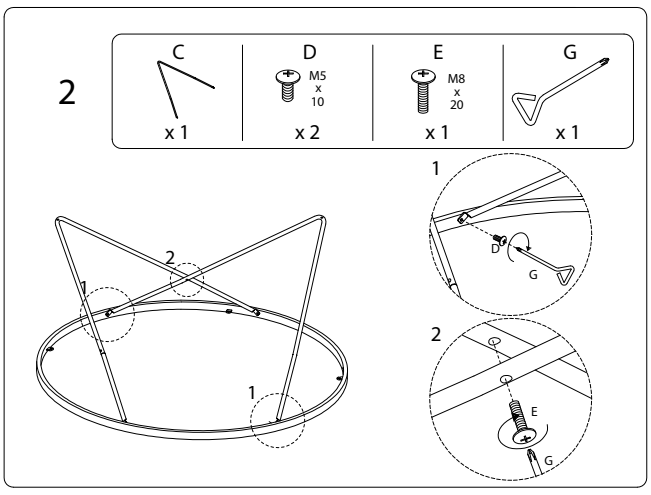
2
C
x 1
D
M5 x 10
x 2
E
M8 x 20
x 1
G
x 1
1
2
1
1
D
G
2
E
G

3/5

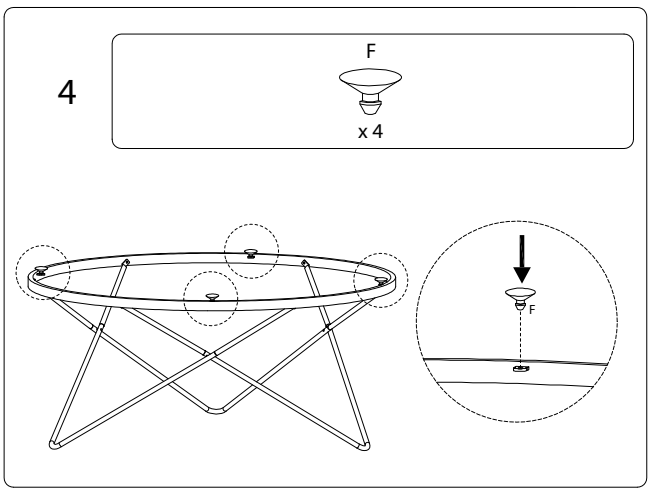
4
F
x 4
F

4/5

5

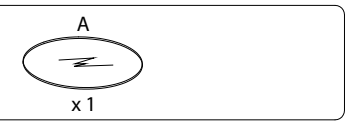

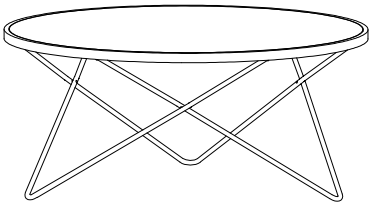

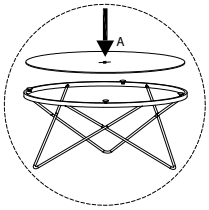

1231/MERIDIAN II/150120/