BELFAST

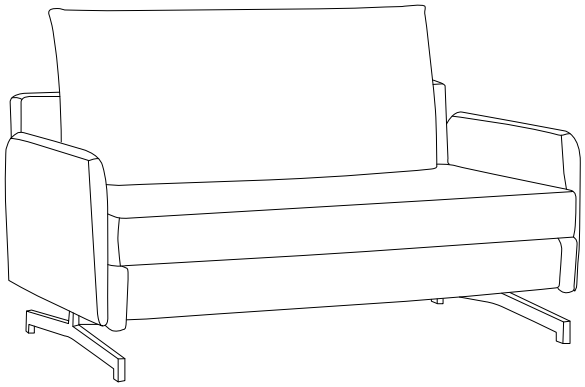

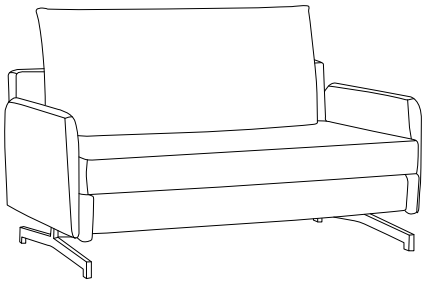

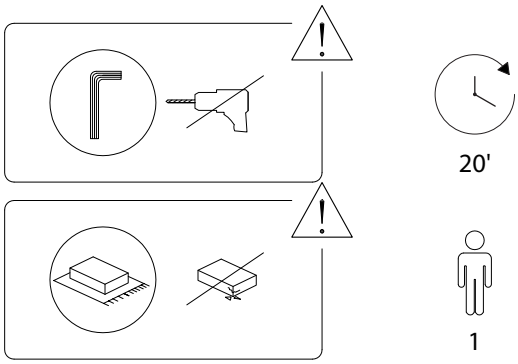

1252/BELFAST/290825/

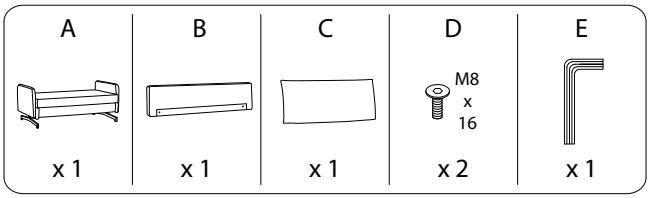

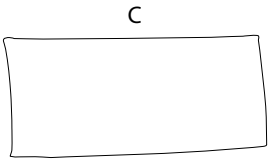

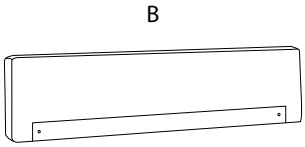

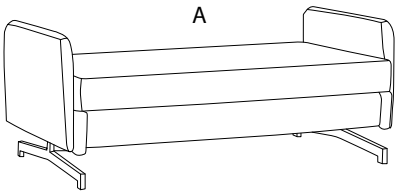

1252/BELFAST/290825/

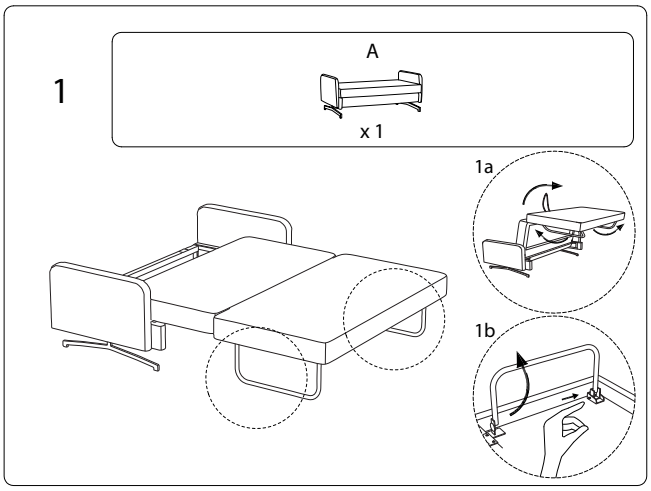

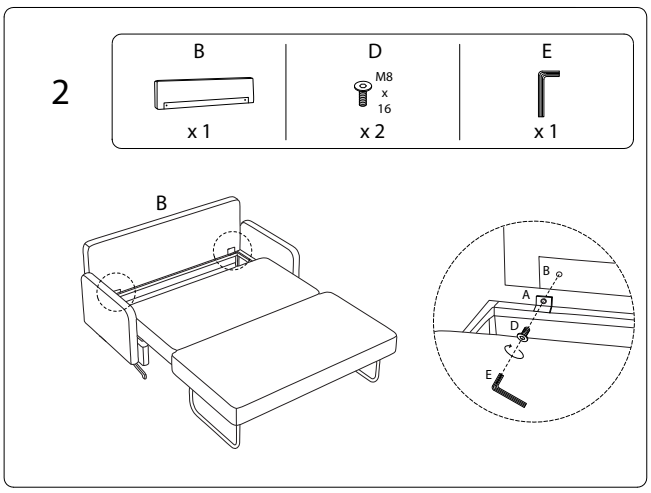

1252/BELFAST/290825/

!

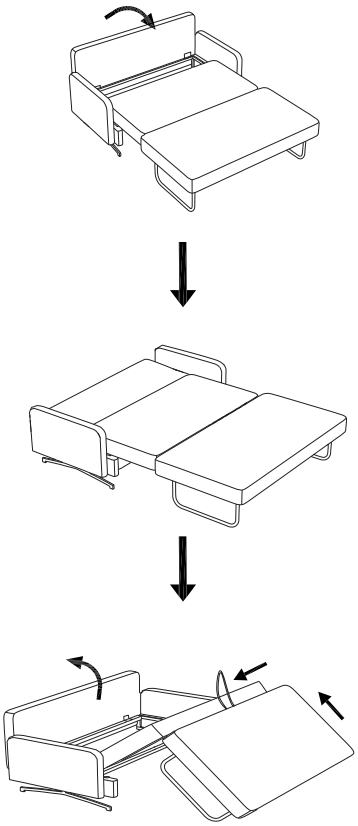

3

C

x 1

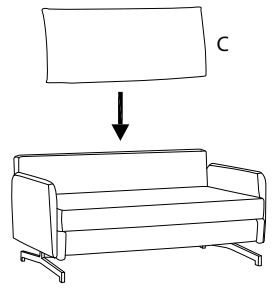

1252/BELFAST/290825/