GLENWOOD

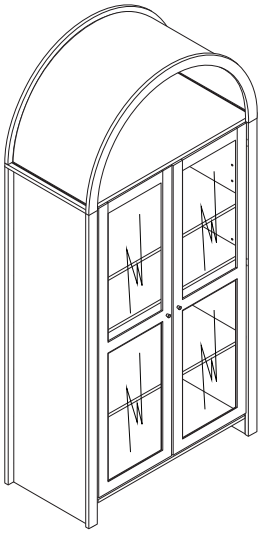

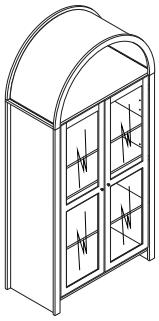

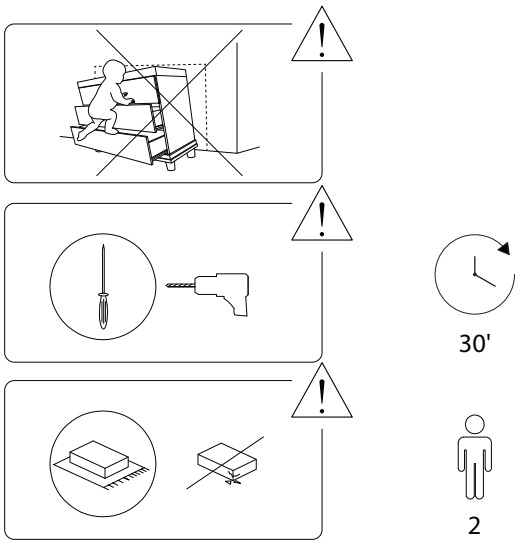
30'
2

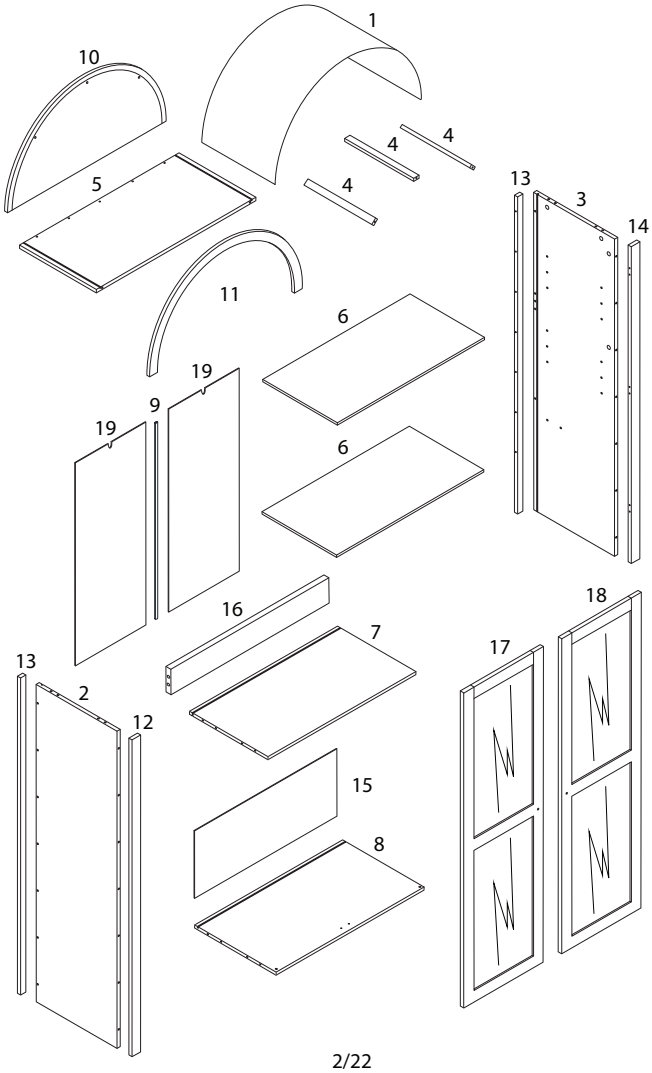
1
10
5
4
4
4
13
3
14
11
6
19
9
19
6
16
7
18
17
13
2
12
15
8

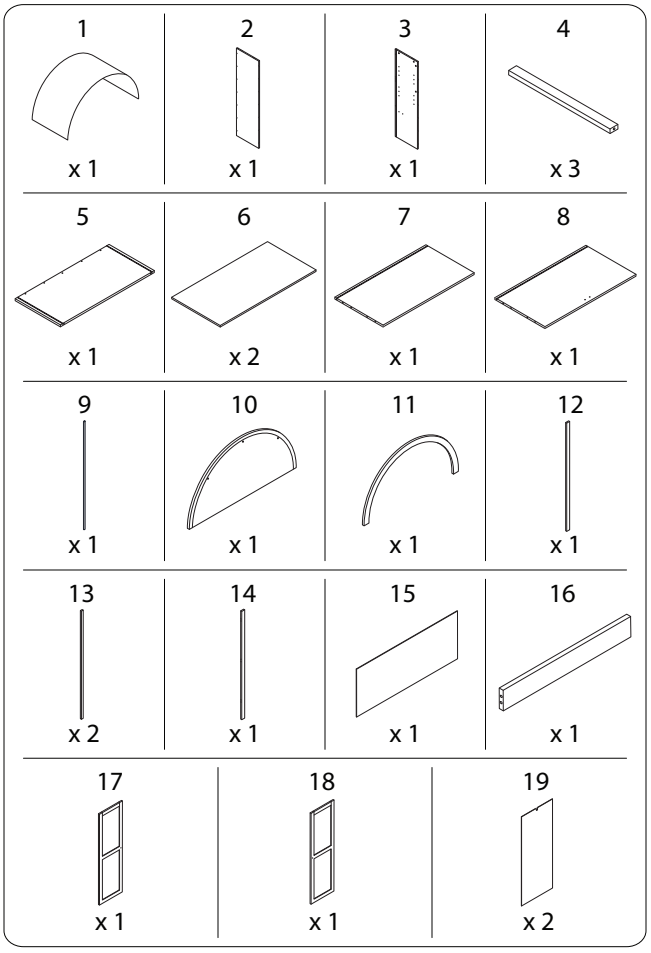
1
x 1
2
x 1
3
x 1
4
x 3
5
x 1
6
x 2
7
x 1
8
x 1
9
x 1
10
x 1
11
x 1
12
x 1
13
x 2
14
x 1
15
x 1
16
x 1
17
x 1
18
x 1
19
x 2

A	B	C	D
M6 x 35		M4 x 30	M4 x 14
x 32	x 32	x 8	x 2
E	**F**	**G**	**H**
M3 x 12	M3 x 14		M4 x 18
x 28	x 12	x 6	x 2
I	**J**	**K**	**L**
x 2	x 2	x 8	x 26
M	**N**	**O**	**P**
			M4 x 35
x 2	x 4	x 2	x 5
Q		**R**	
x 8		x 22	

1

2	3	A
x 1	x 1	M6 x 35 x 12

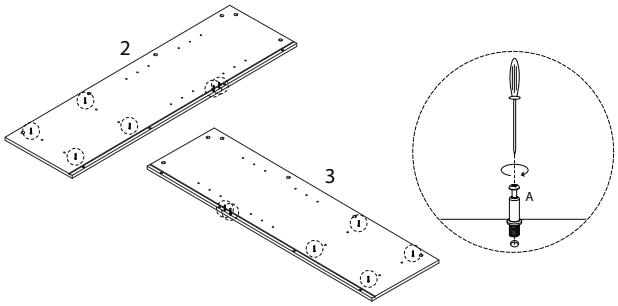

2

13	L
x 2	x 6

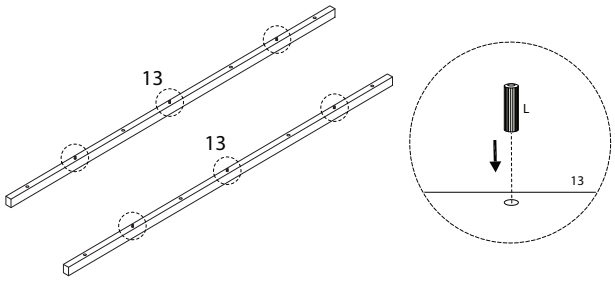

3

C M4 x 30 x 4

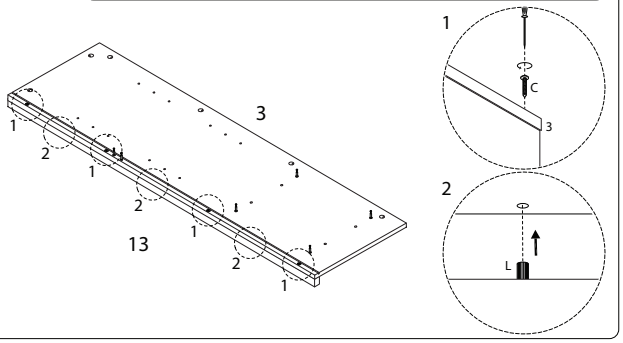

5

L x 3

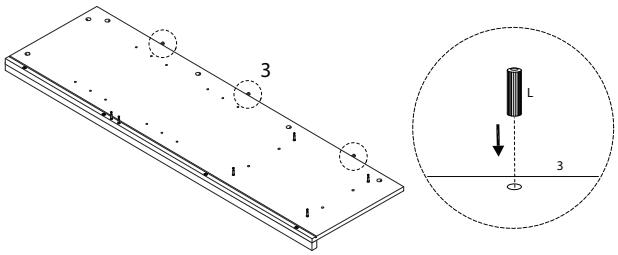

4

C M4 x 30 x 4

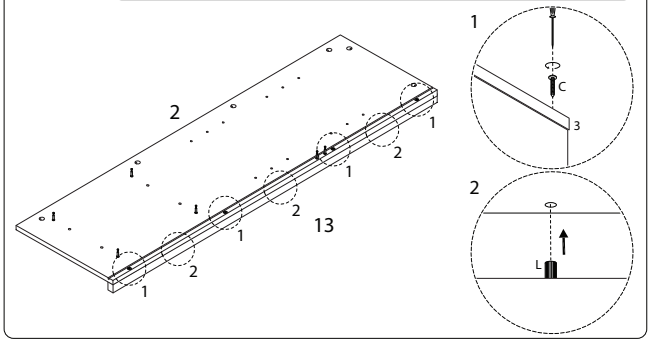

6

L x 3

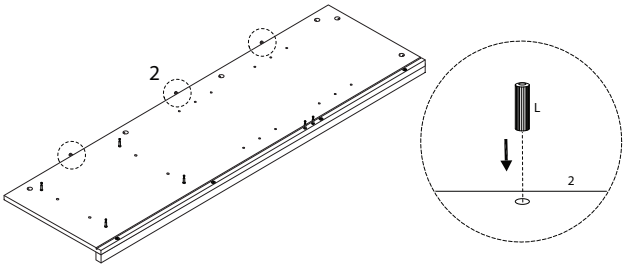

7

12	14	A
x 1	x 1	M6 x 35 x 8

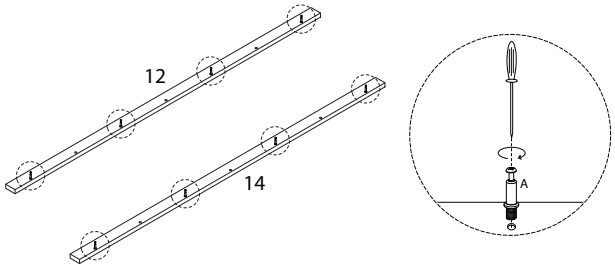

8

B
x 4

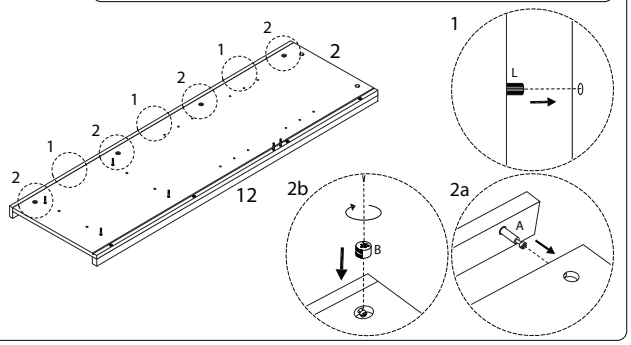

9

B
x 4

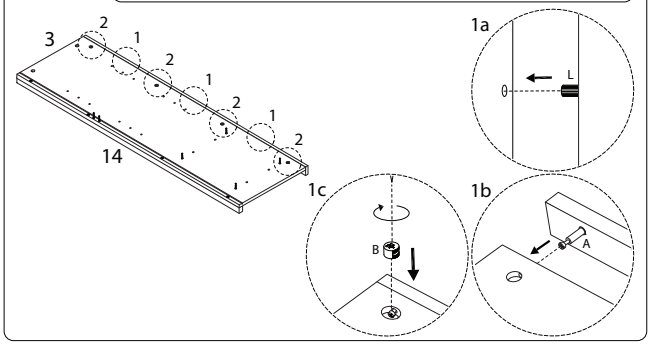

10

8	F	M
x 1	M3 x 14 x 2	x 1

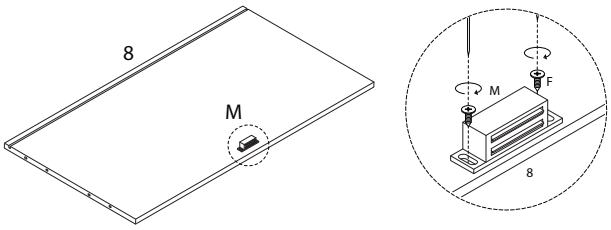

11

5	F	M
x 1	M3 x 14 x 2	x 1

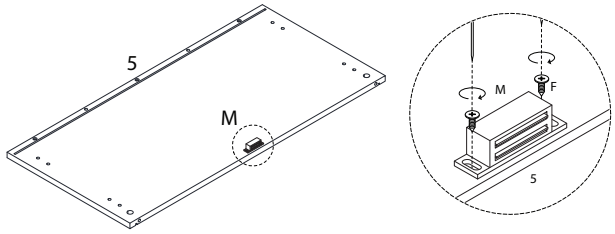

13

7	L
x 1	x 8

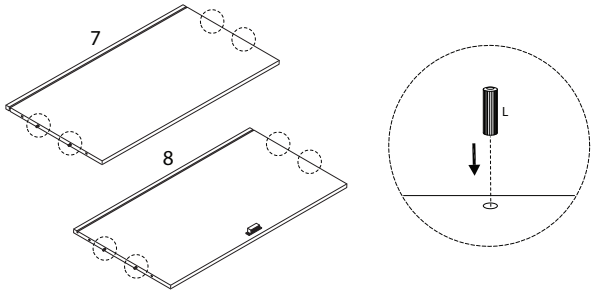

12

D	O
M4 x 14 x 2	x 2

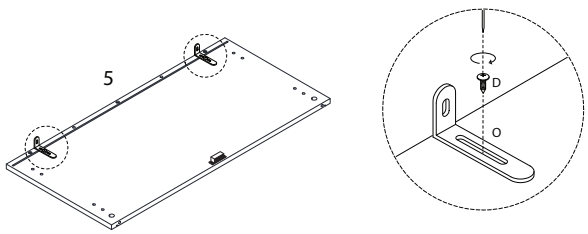

14

16	B
x 1	x 6

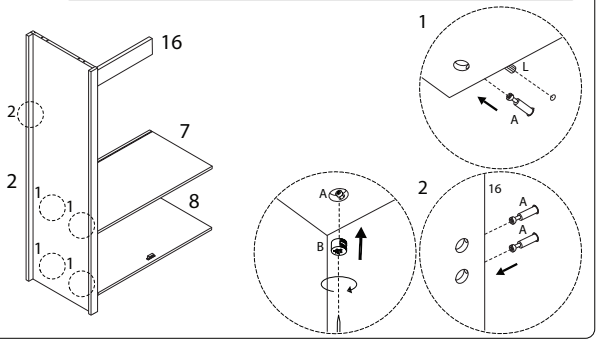

15

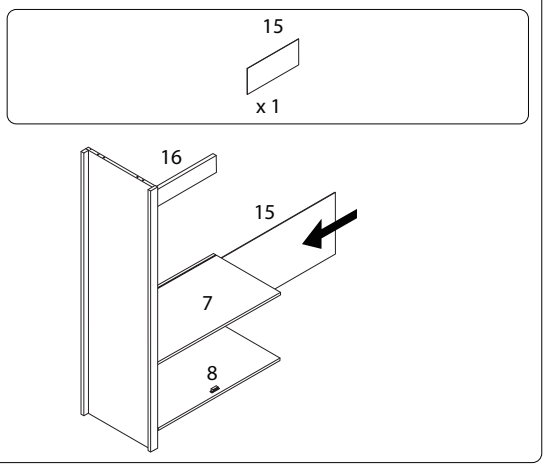

16

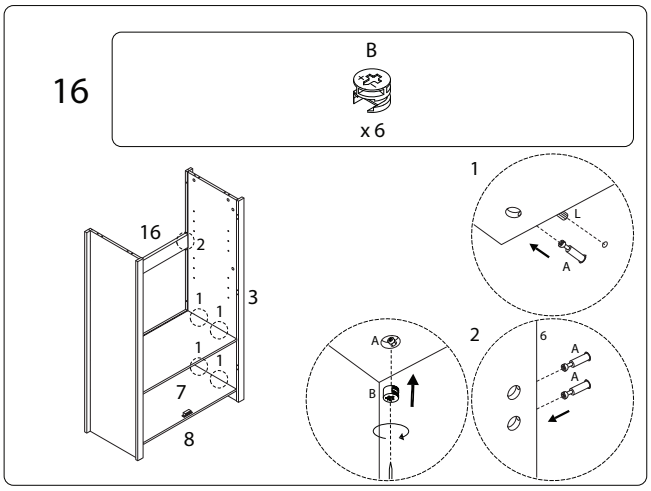

17

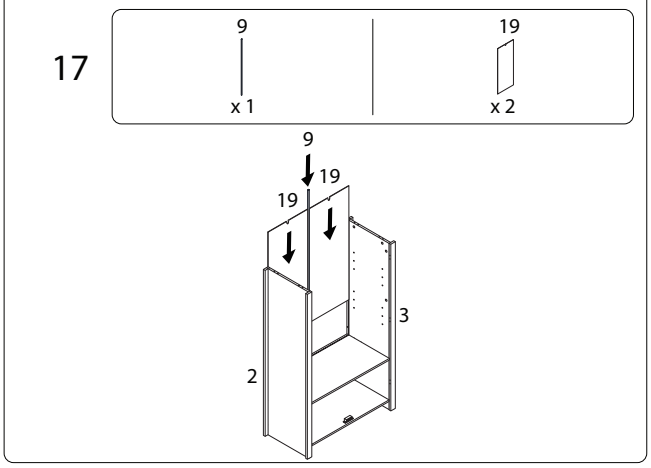

18

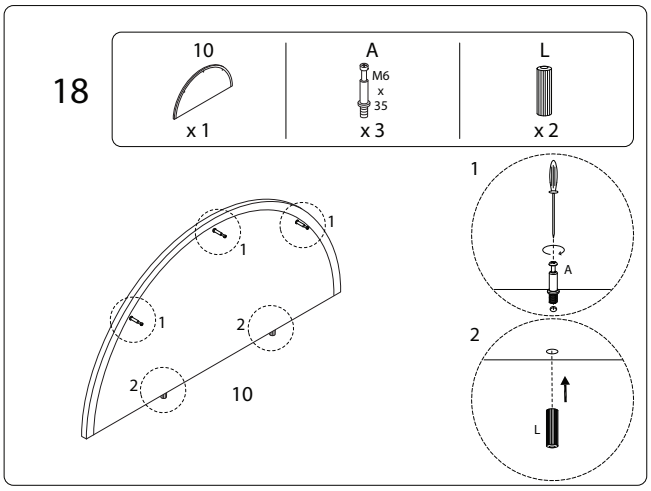

19

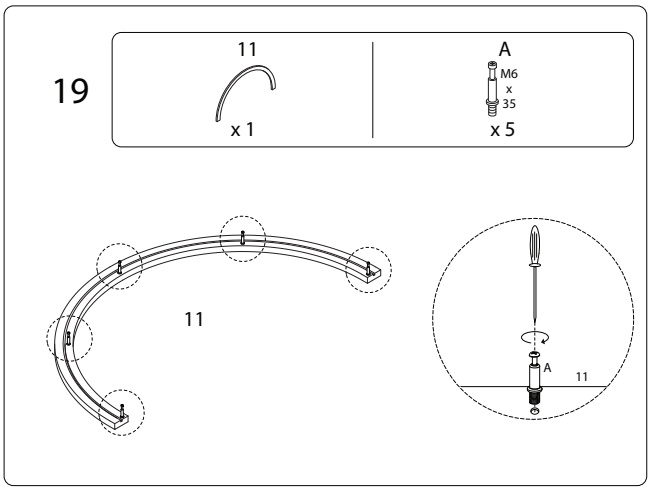

20

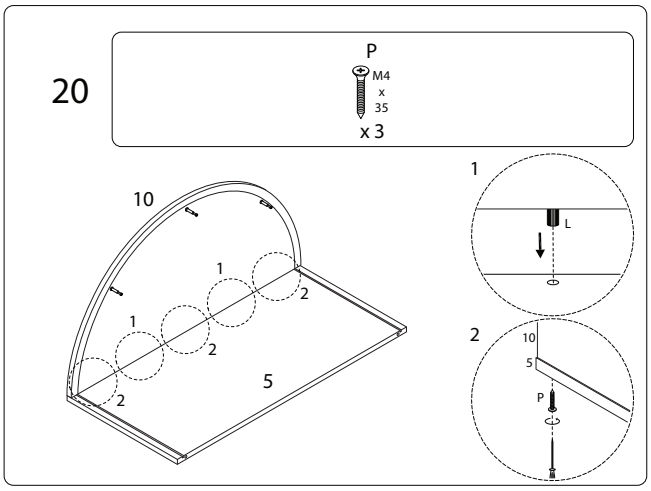

21

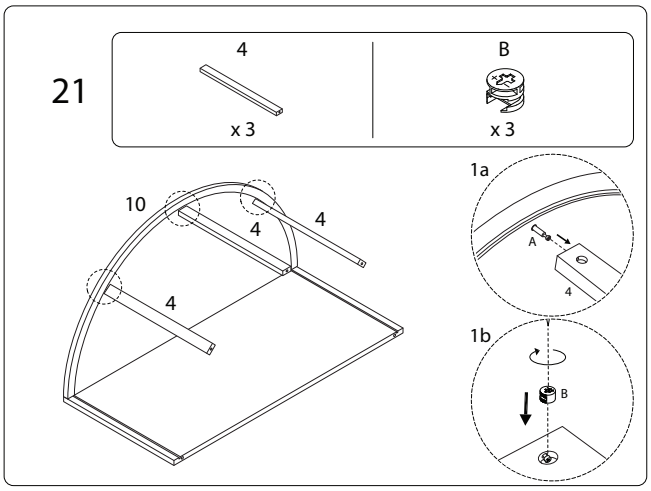

22

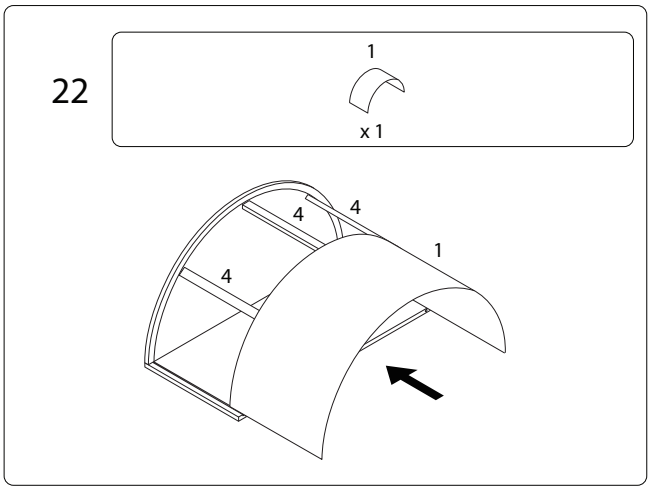

23

B

x 5

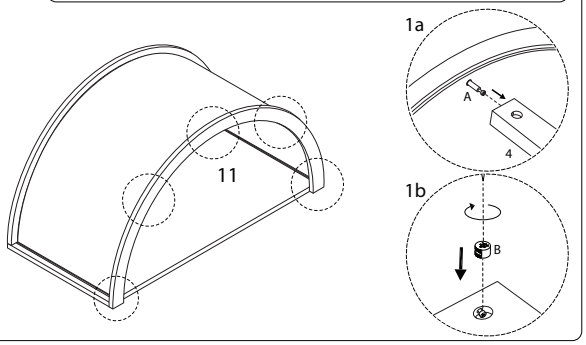

24

A

M6 x 35

x 4

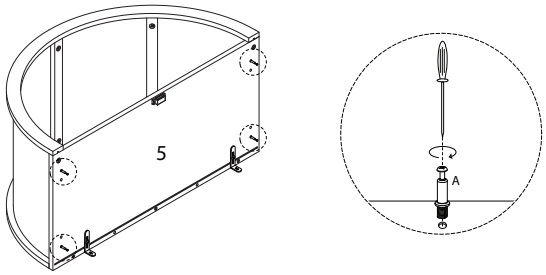

25

L

x 4

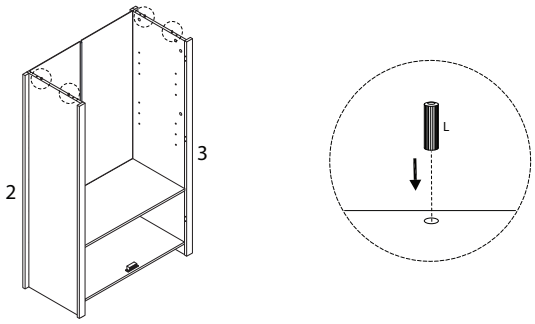

26

B

x 4

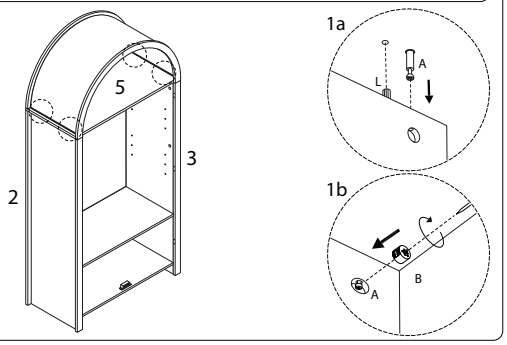

27

17	18	E	G
x 1	x 1	M3 x 12 x 12	x 6

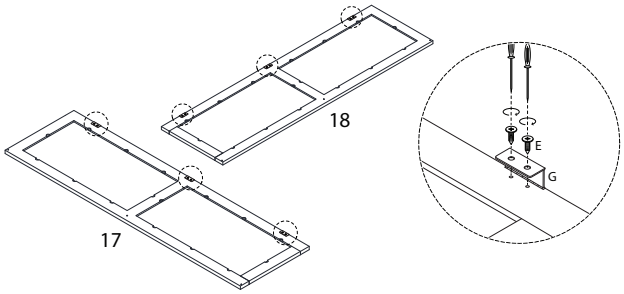

28

I	H
x 2	M4 x 18 x 2

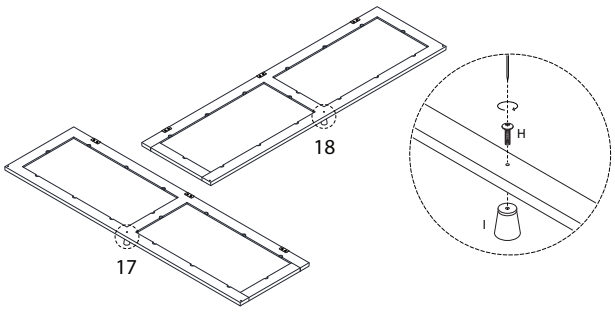

29

E	N
M3 x 12 x 4	x 4

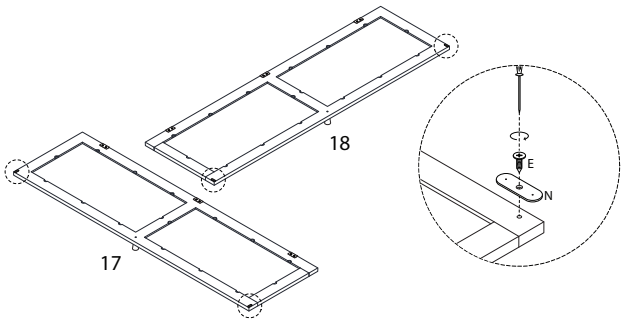

30

E

M3 x 12

x 12

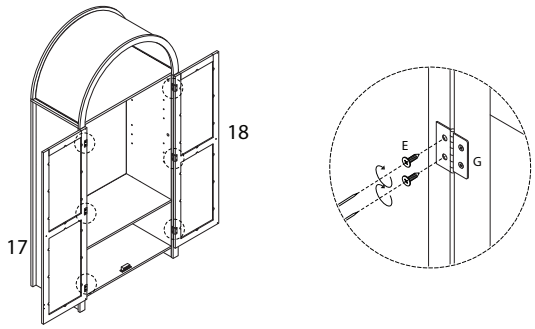

31

Q

x 8

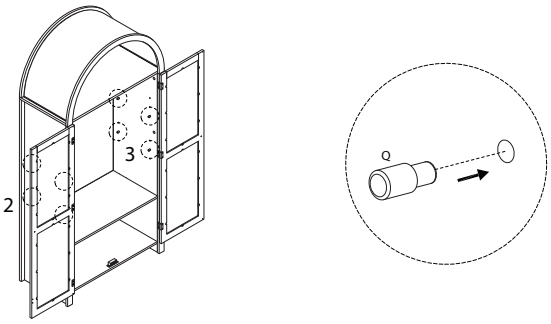

32

6

x 2

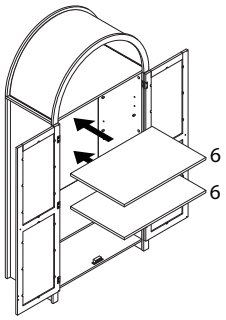

33

F

M3 x 14

x 8

K

x 8

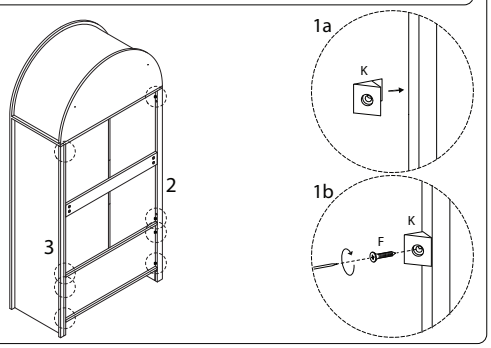

34

J

x 2

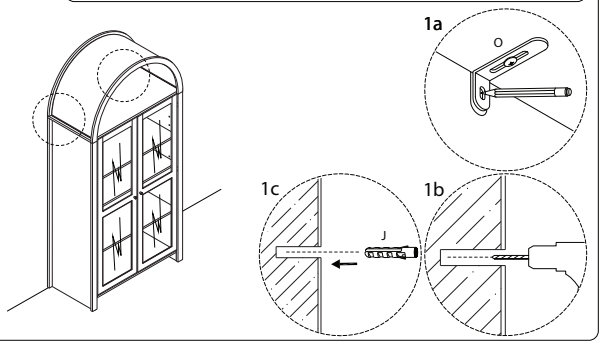

35

P

M4 x 35

x 2

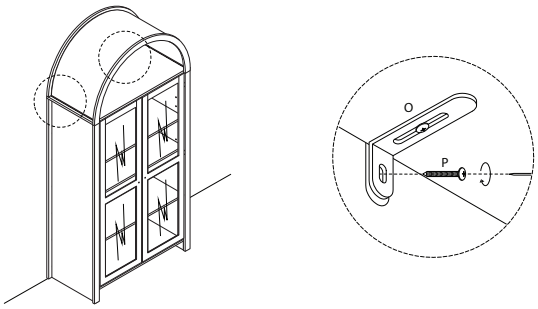

36

R
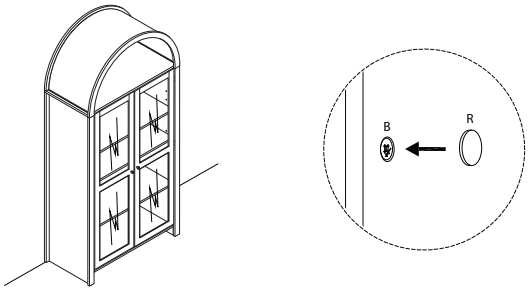
x 22