MONTIRA

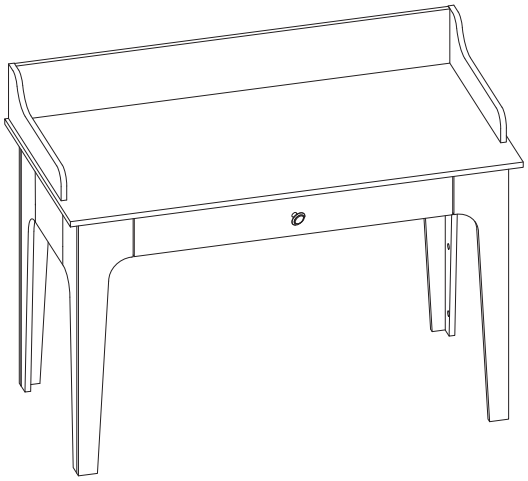

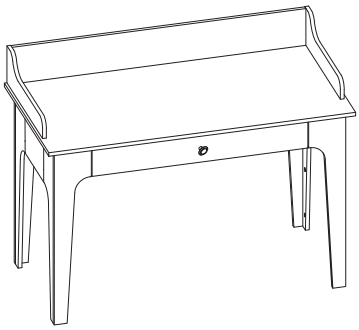

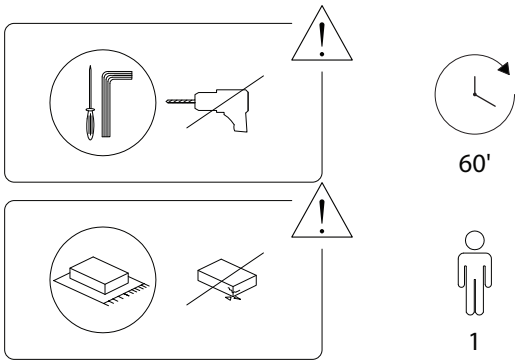

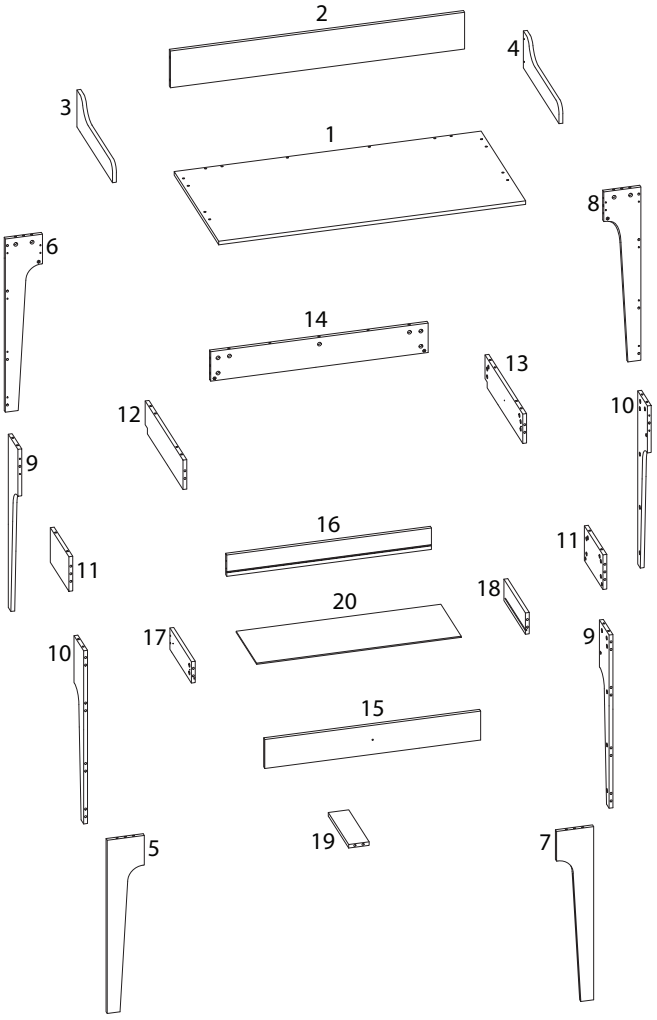

1 x 1	2 x 1	3 x 1	4 x 1
5 x 1	6 x 1	7 x 1	8 x 1
9 x 2	10 x 2	11 x 2	12 x 1
13 x 1	14 x 1	15 x 1	16 x 1
17 x 1	18 x 1	19 x 1	20 x 1

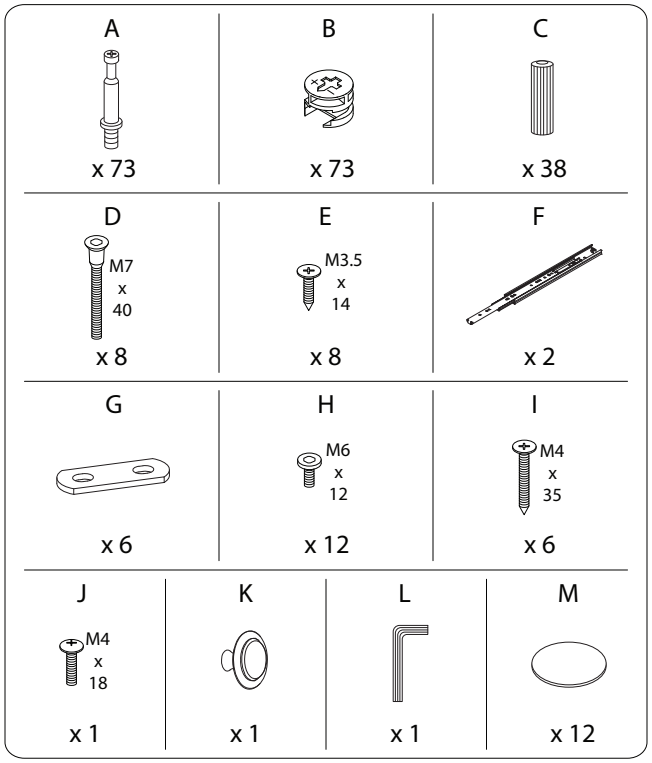
A
x 73
B
x 73
C
x 38
D
M7 x 40
x 8
E
M3.5 x 14
x 8
F
x 2
G
x 6
H
M6 x 12
x 12
I
M4 x 35
x 6
J
M4 x 18
x 1
K
x 1
L
x 1
M
x 12

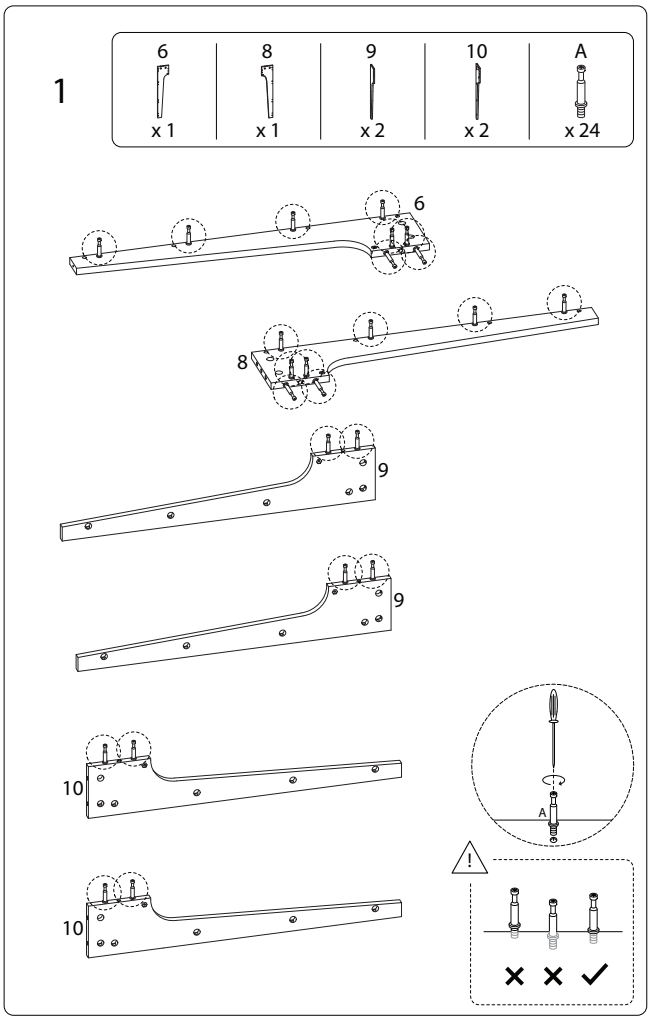
1
6
x 1
8
x 1
9
x 2
10
x 2
A
x 24
6
8
9
9
10
10
A

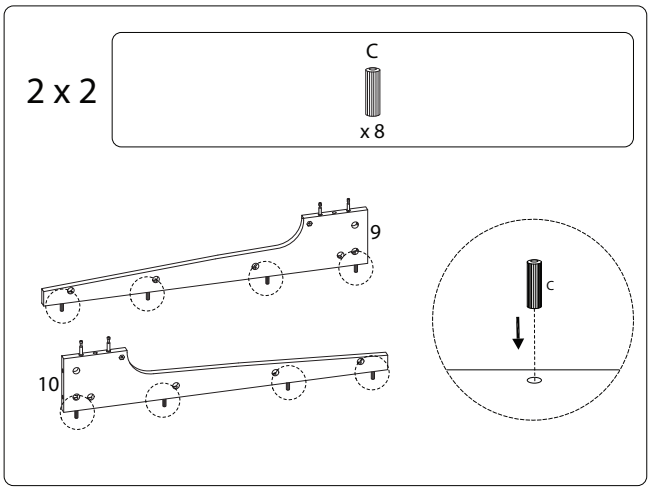
2 x 2
C
x 8
9
10
C

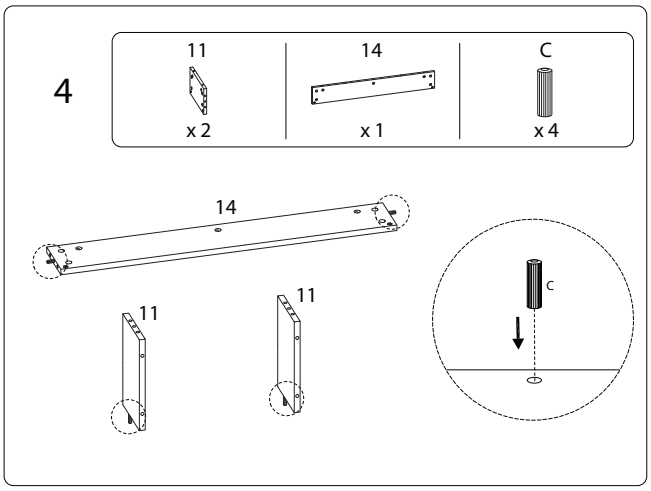
4
11
x 2
14
x 1
C
x 4
14
11
11
C

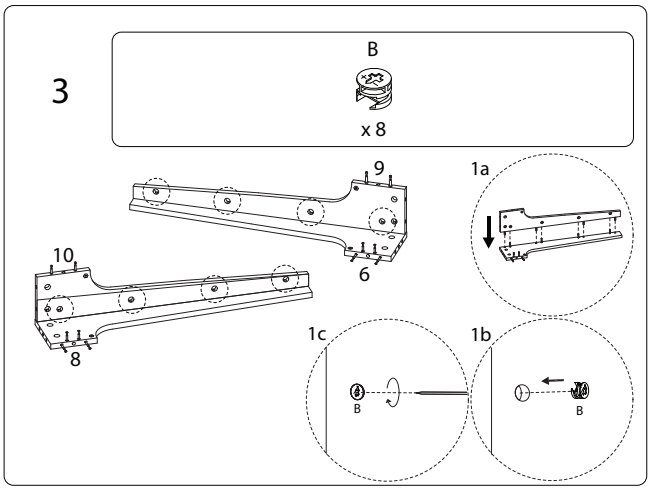
3
B
x 8
9
10
6
8
1a
1c
1b
B
B

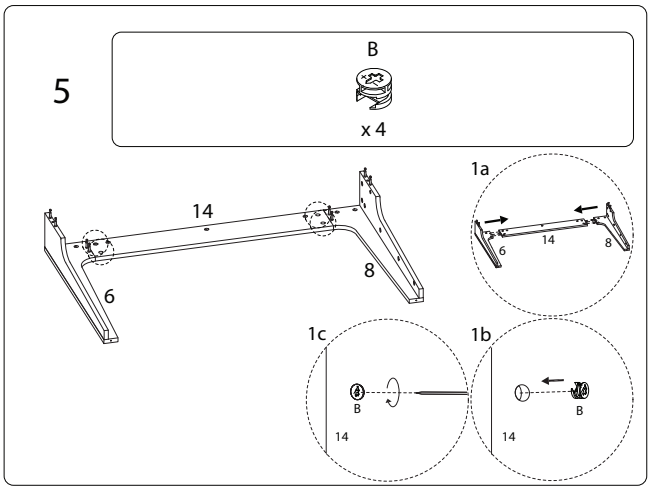
5
B
x 4
14
6
8
1a
6
14
8
1c
1b
B
14
B
14

6

G	H	L
x 2	M6 x 12 x 4	x 1

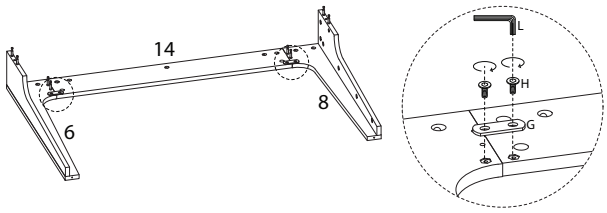

7

B
x 4

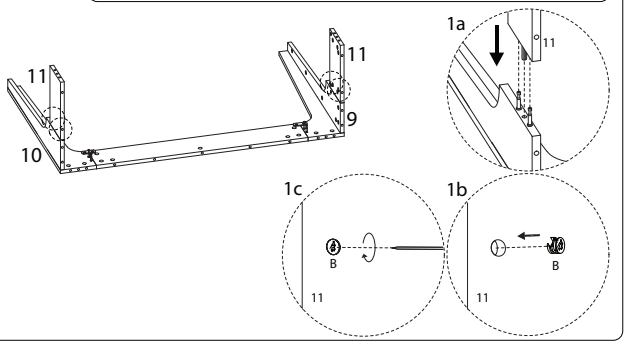

8

G	H	L
x 2	M6 x 12 x 4	x 1

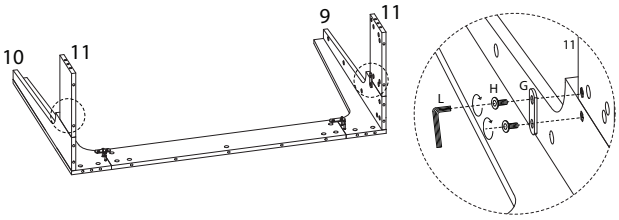

!

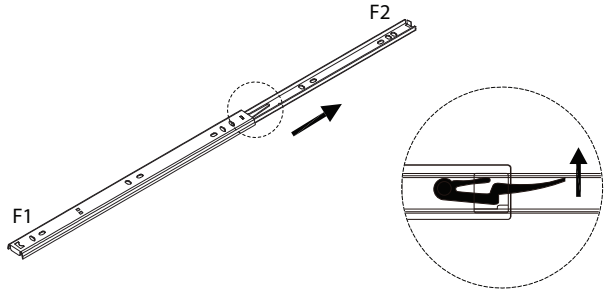

9

12	13	E	F1
x 1	x 1	M3.5 x 14 x 4	x 2

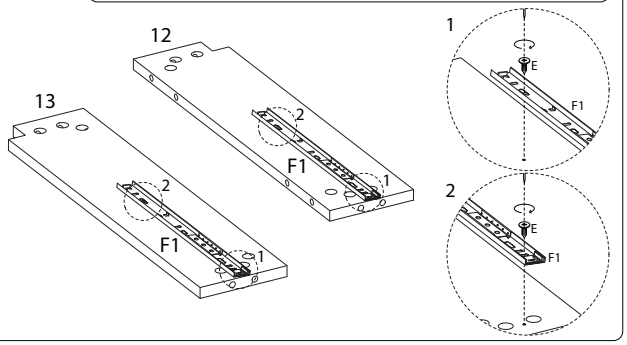

11

5	7	A
x 1	x 1	x 12

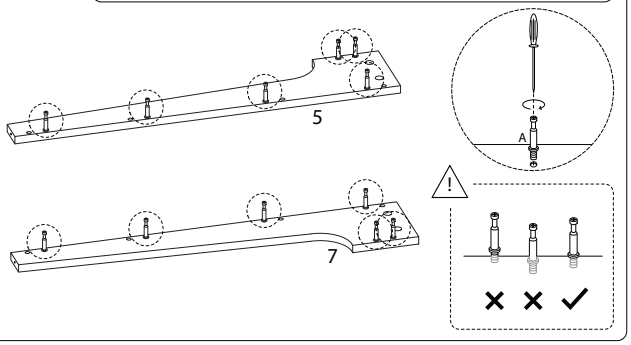

10

B
x 4

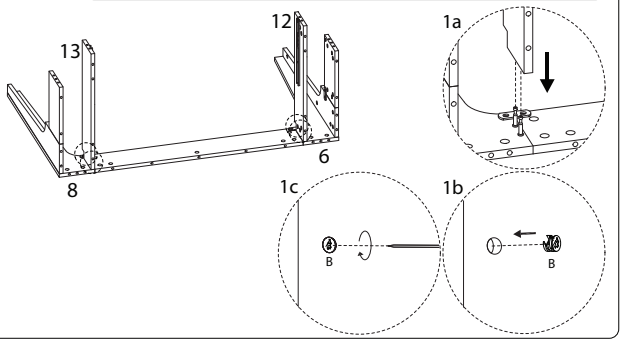

12

B
x 8

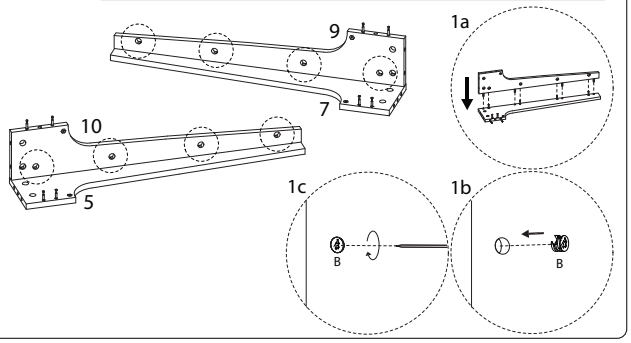

13

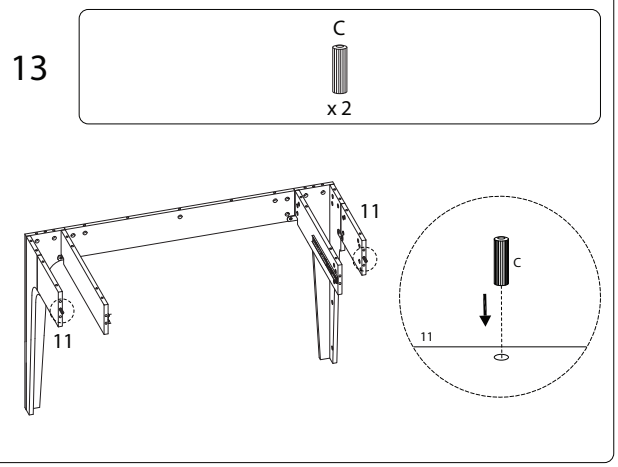

14

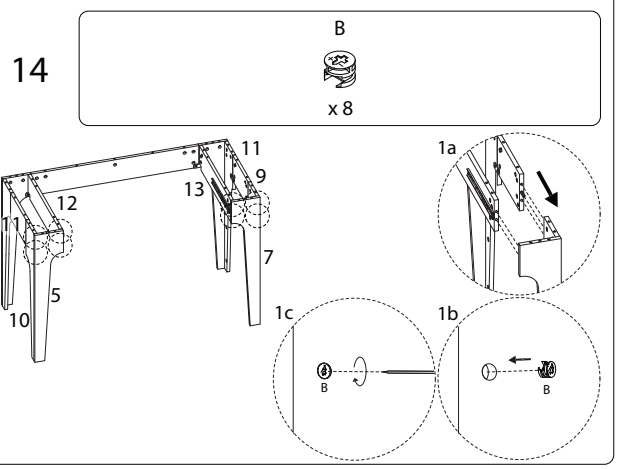

15

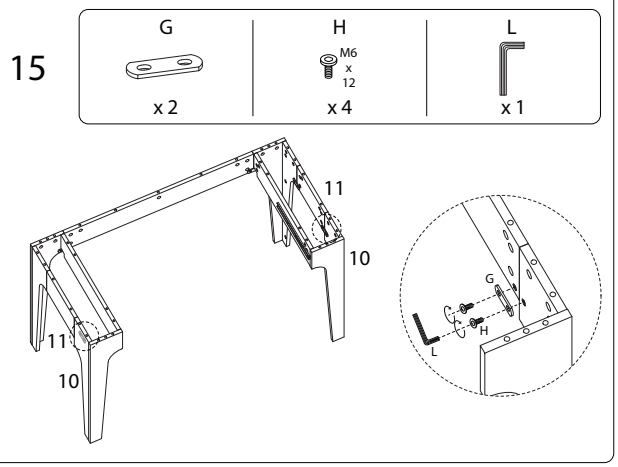

16

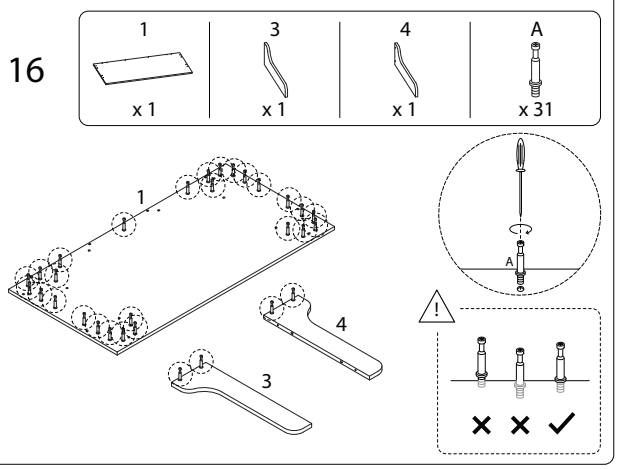

17

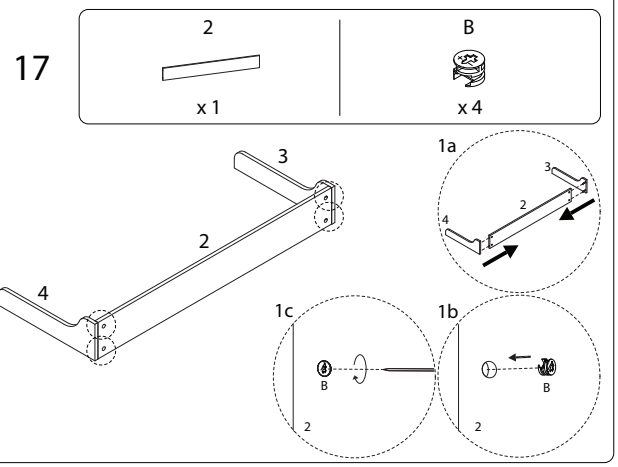

18

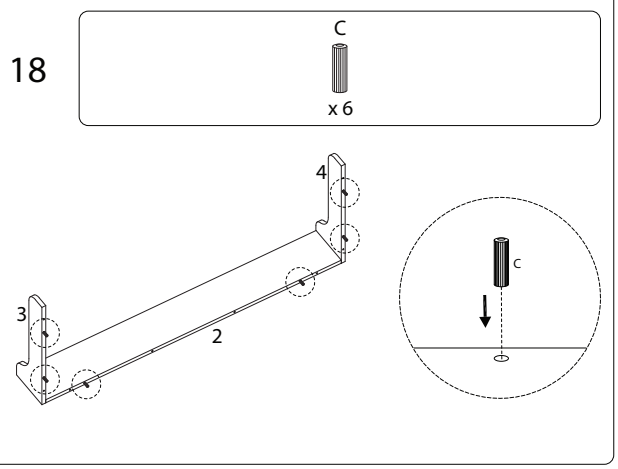

19

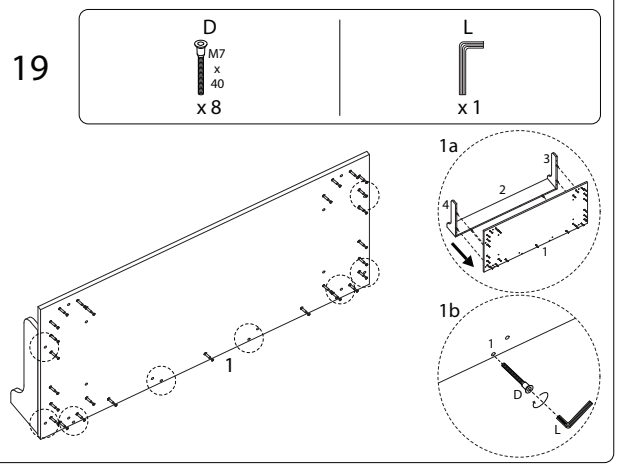

20

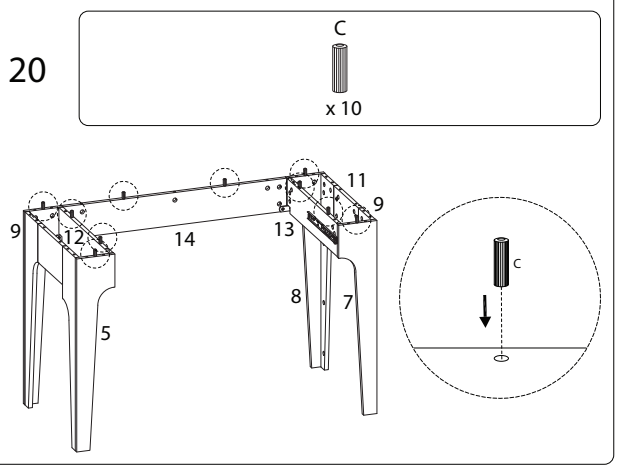

21

B

x 27

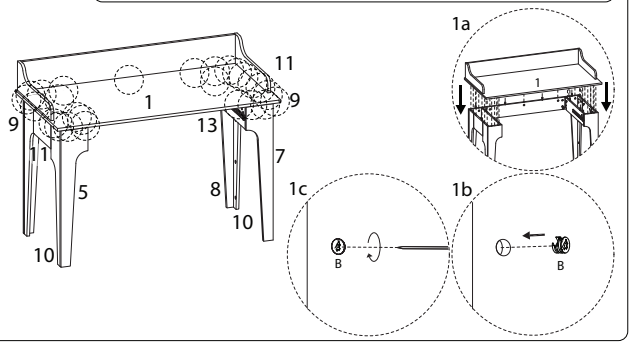

22

15	A
x 1	x 6

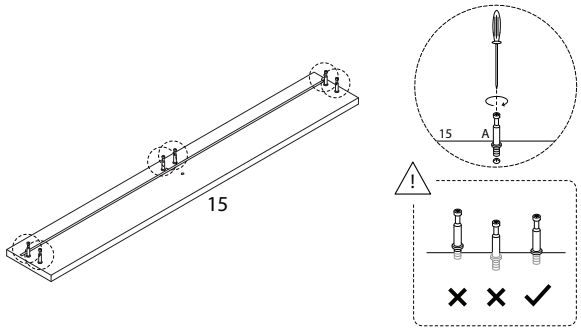

23

16	17	18	19	I
x 1	x 1	x 1	x 1	M4 x 35 x 6

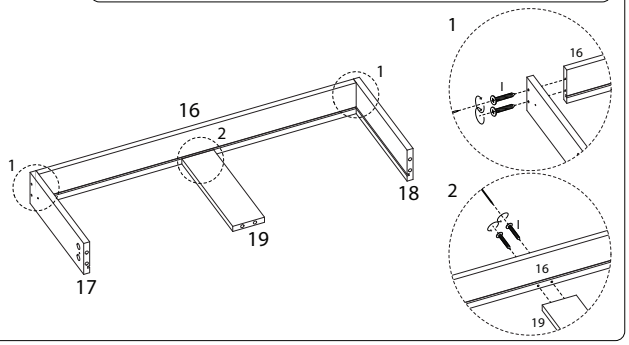

24

20

x 1

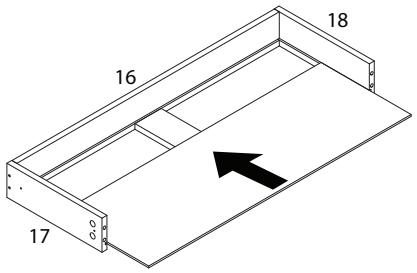

25

B

x 6

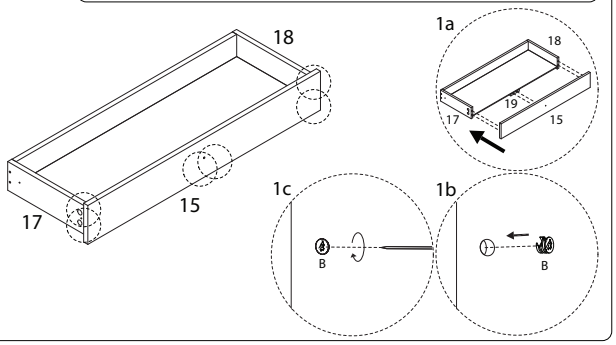

26

J	K
M4 x 18 x 1	x 1

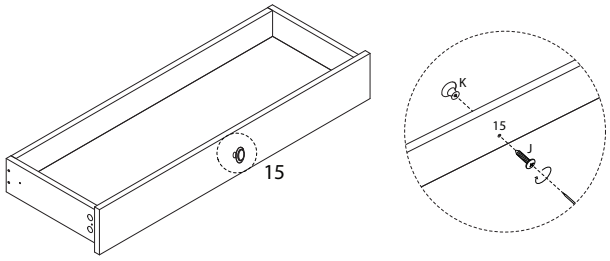

27

E	F2
M3.5 x 14 x 4	x 2

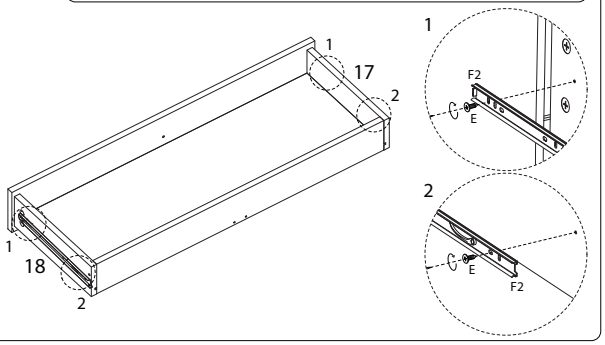

28

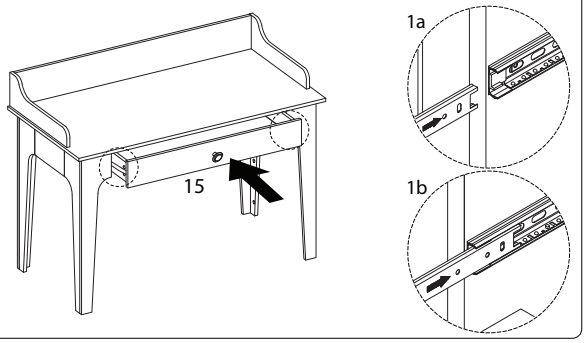

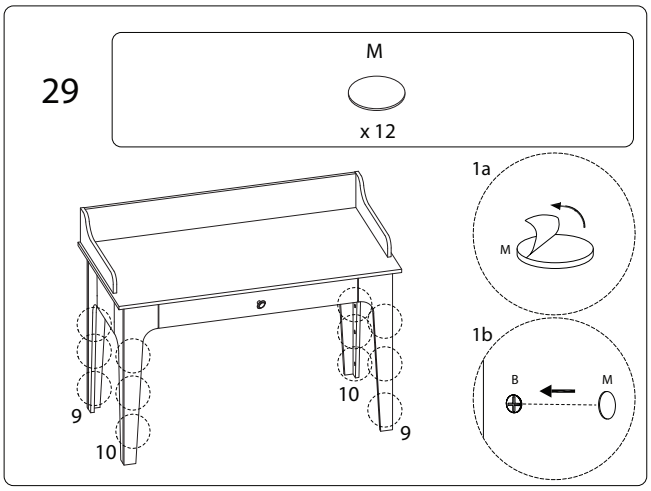

2838/MONTIRA/110826/