MAROA

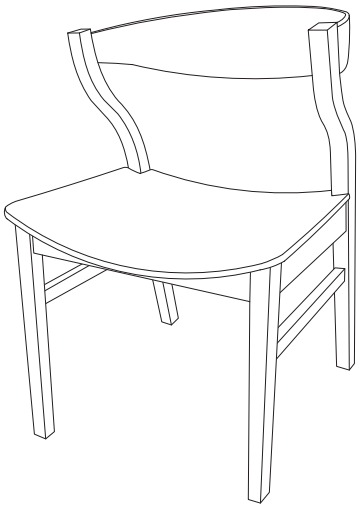

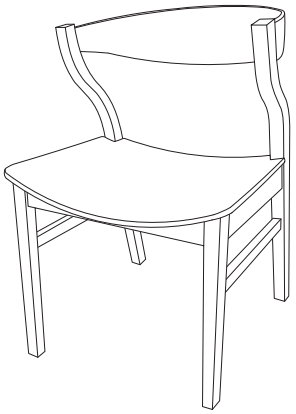

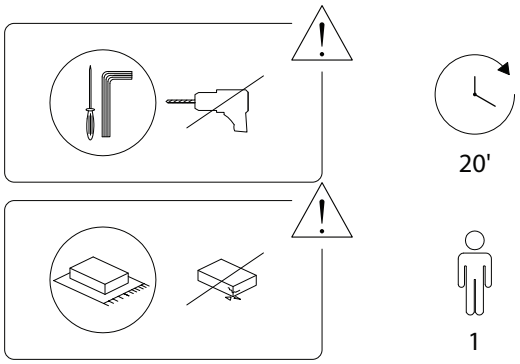

1/6

A	B_L	B_R
		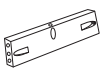
x 1	x 1	x 1

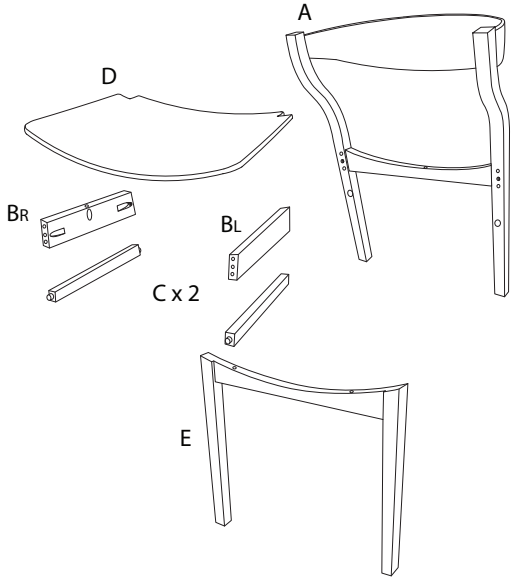

C	D	E
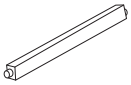		
x 2	x 1	x 1

1	2	3
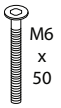 M6 x 50		
x 4	x 4	x 1

4	5
 M5 x 32	
x 9	x 8

1

B_L	B_R	5
x 1	x 1	x 8

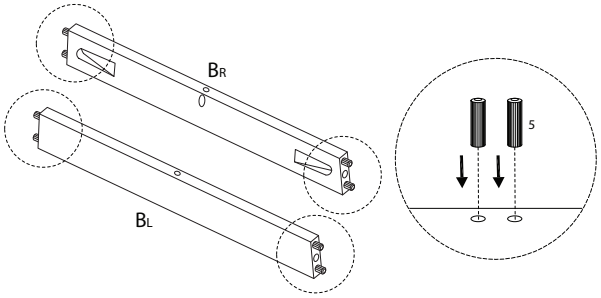

2

E	1	2	3
x 1	M6 x 50 x 2	x 2	x 1

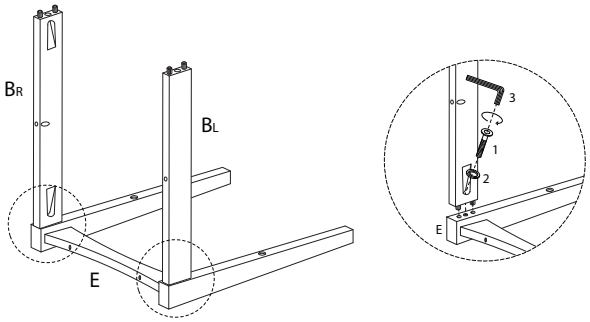

3

C	4
x 2	M5 x 32 x 2

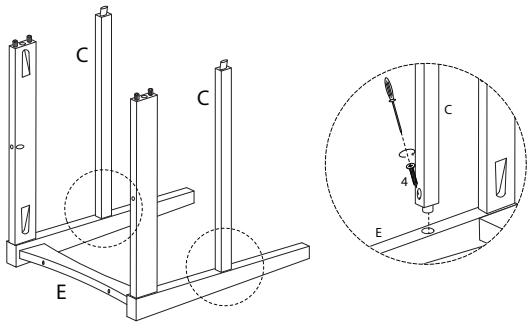

4

A	1	2	3	4
x 1	M6 x 50 x 2	x 2	x 1	M5 x 32 x 2

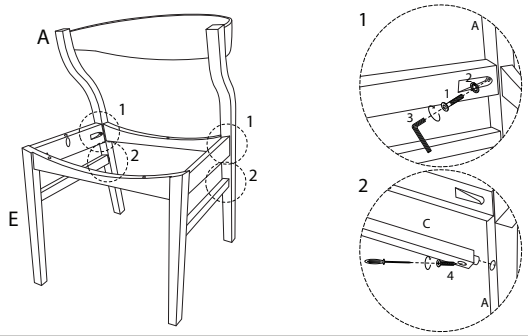

5

D	4
x 1	M5 x 32 x 5

