ONDLE

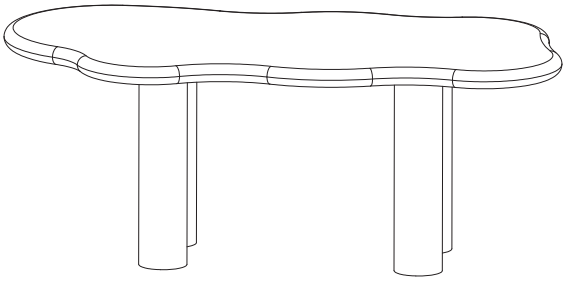

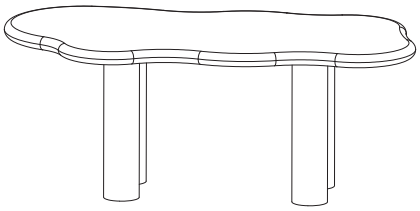

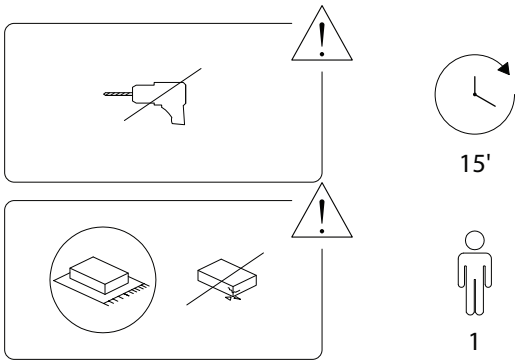

1/3

B

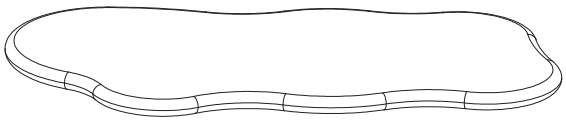

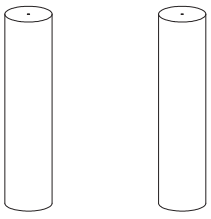

C x 4

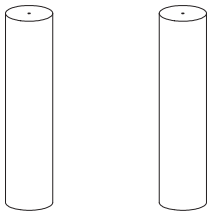

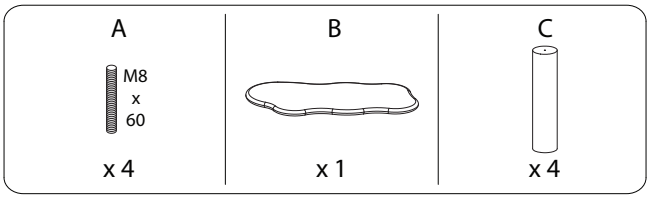

2/3

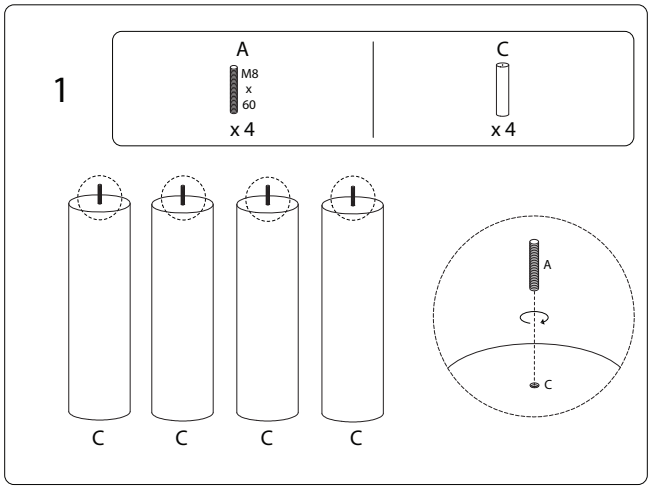

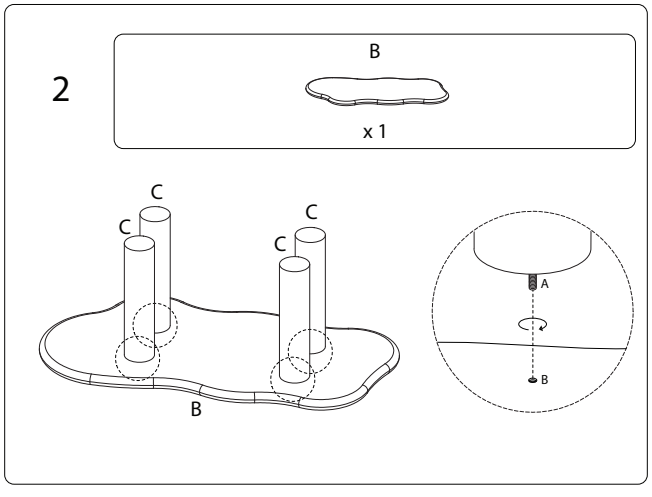

3/3