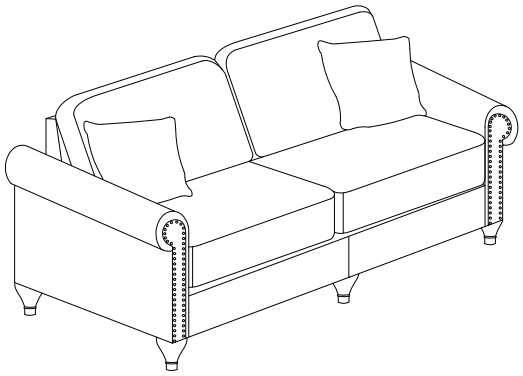

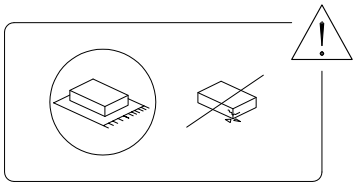

30'

2

1/7

A	B	C	D	E
x 1	x 1	x 1	x 1	x 1

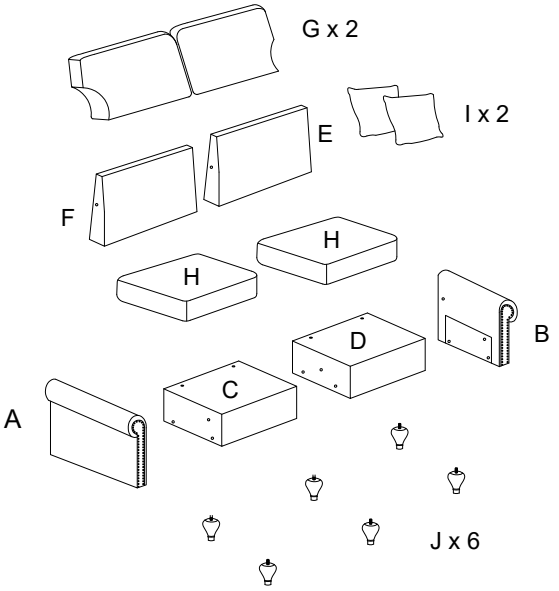

F	G	H	I	J	K
x 1	x 2	x 2	x 2	x 6	x 16

2/7

!

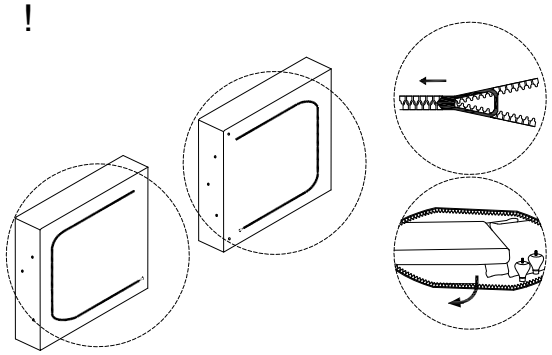

1

C	D
x 1	x 1

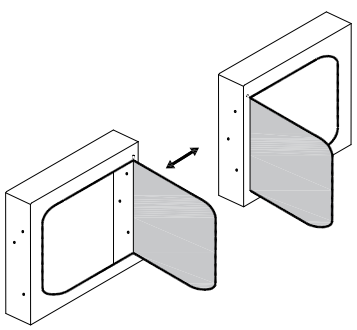

3/7

2

K
x 3

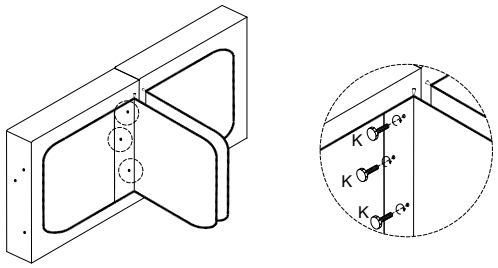

3

A	B	K
x 1	x 1	x 6

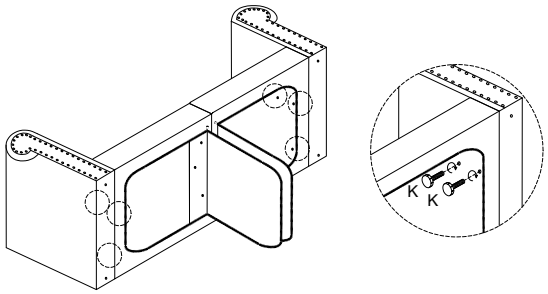

4/7

4

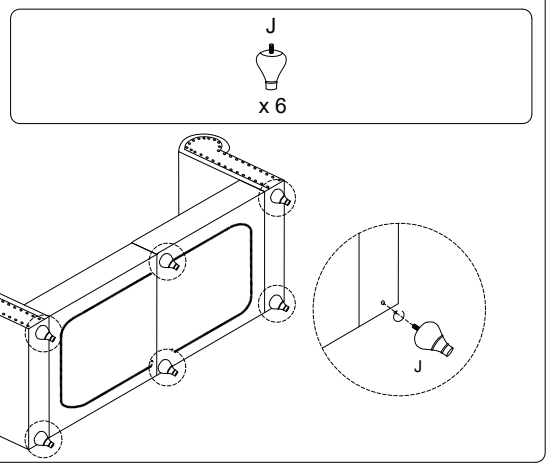

5

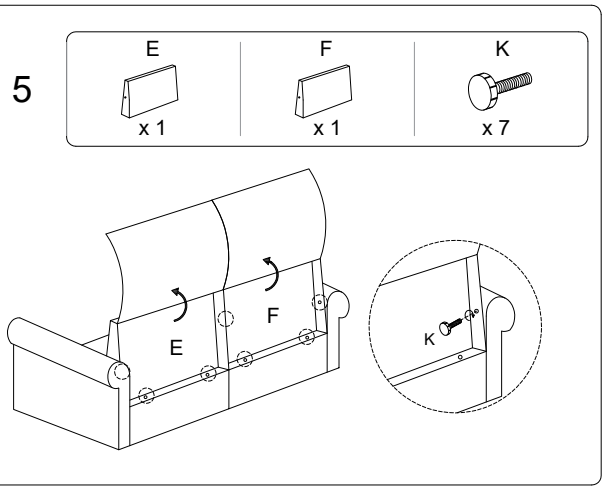

6

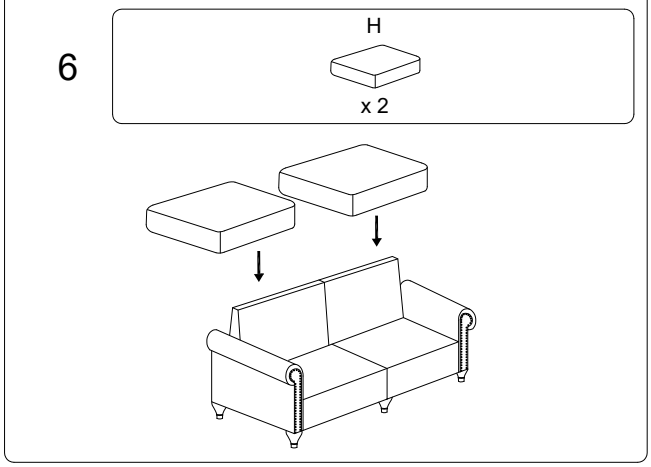

7

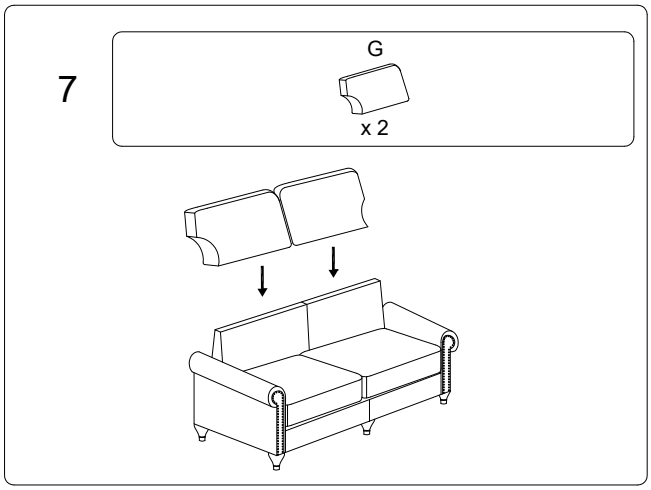

8

