CHATEH

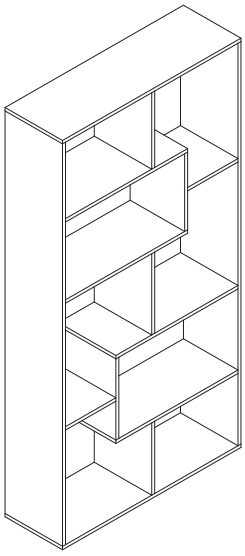

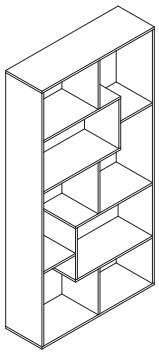

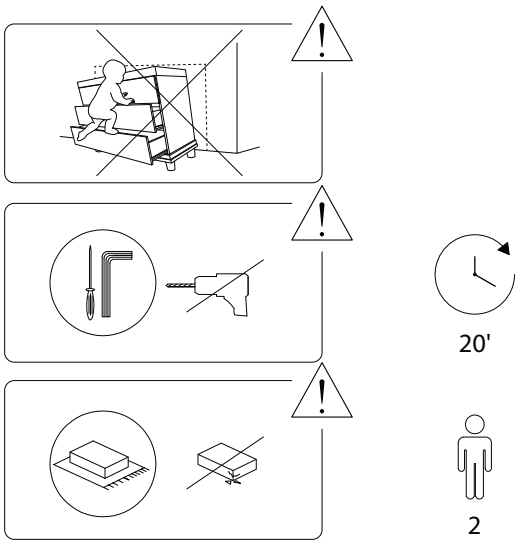
20'
2

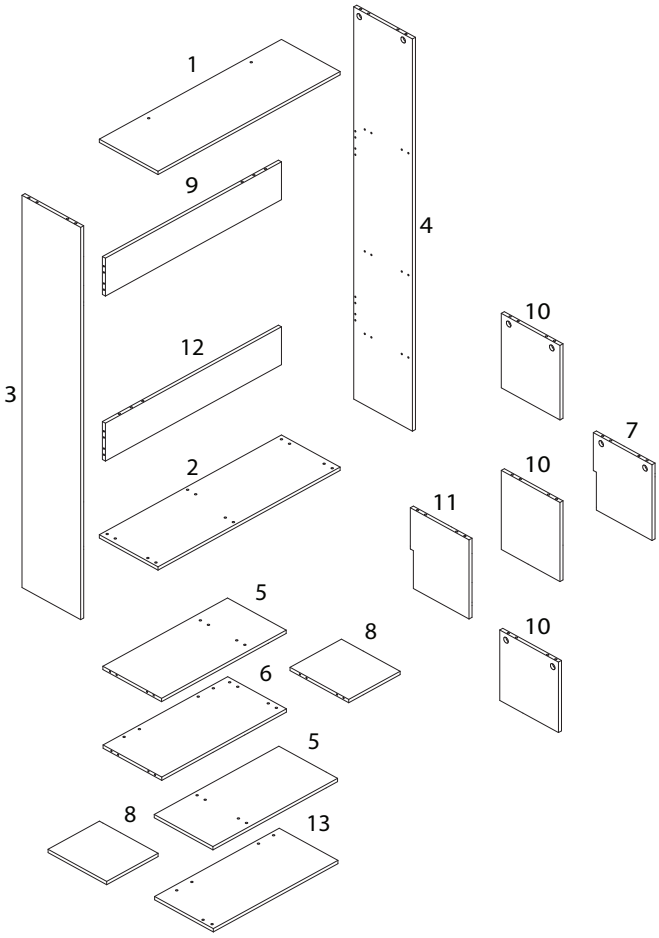
1
9
4
3
12
10
7
2
11
10
5
8
10
6
5
8
13

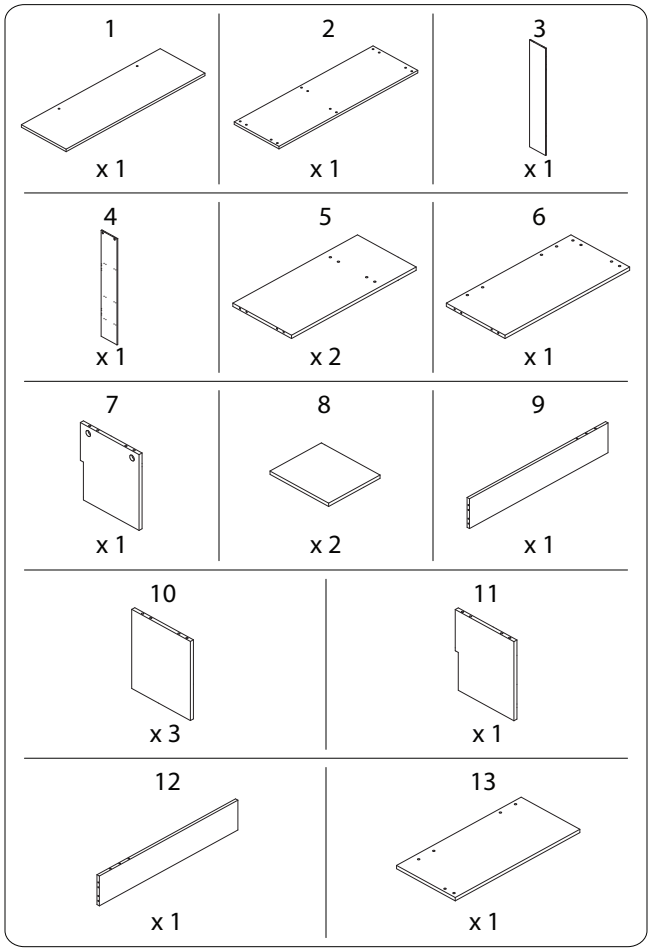
1
x 1
2
x 1
3
x 1
4
x 1
5
x 2
6
x 1
7
x 1
8
x 2
9
x 1
10
x 3
11
x 1
12
x 1
13
x 1

A	B	C
x 40	x 40	x 52
D (M5 x 40)	E	F_1
x 18	x 14	x 2
F_2 (M4 x 40)	F_3 (M4 x 14)	F_4
x 2	x 2	x 2
G	H	
x 1	x 6	

1

1	3	4	6
x 1	x 1	x 1	x 1
7	11	13	A
x 1	x 1	x 1	x 34

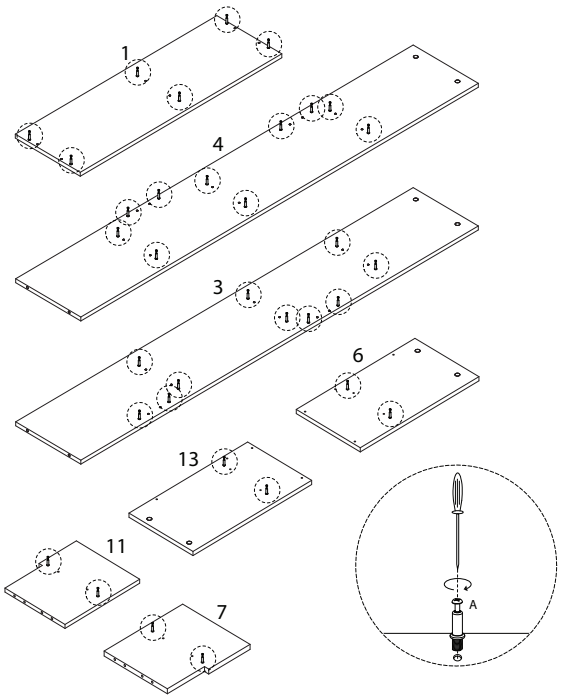

2 x 2

5	8	A
x 1	x 1	x 3

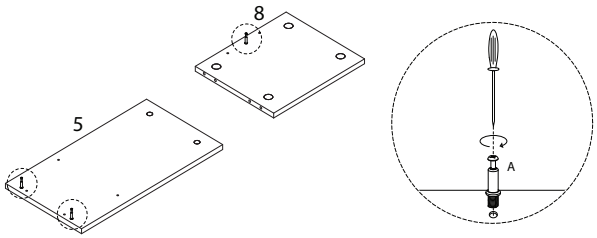

4

10	C
x 2	x 8

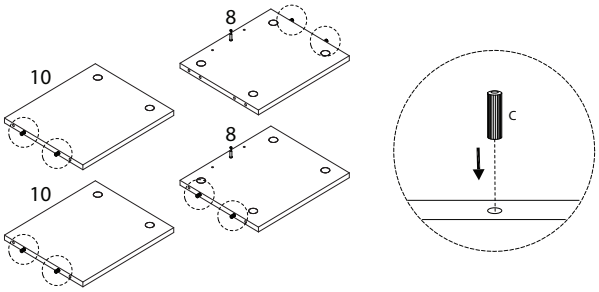

3

F_1	F_3 (M4 x 14)
x 2	x 2

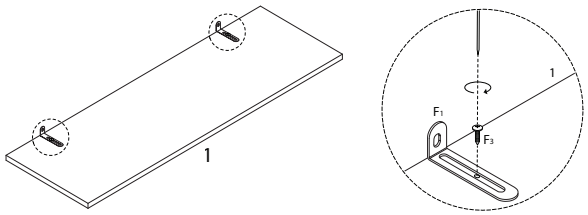

5 x 2

D (M5 x 40)	G
x 2	x 1

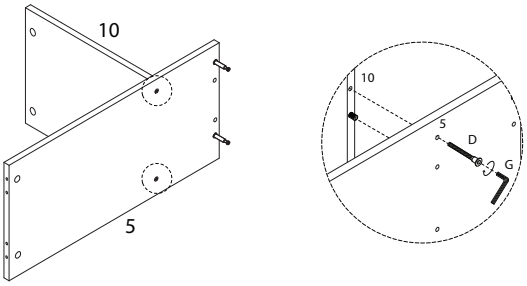

6

B

x 2

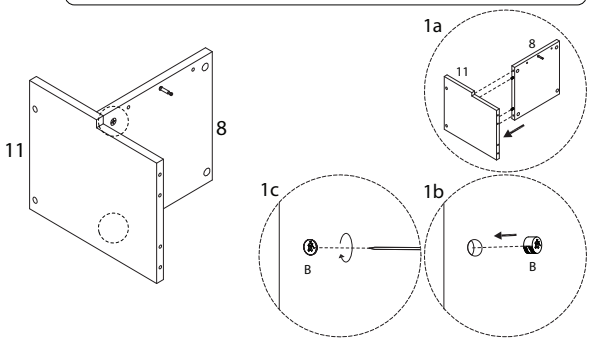

7

B

x 2

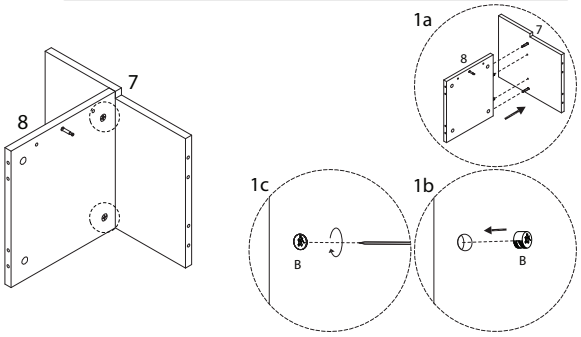

8

9

x 1

C

x 2

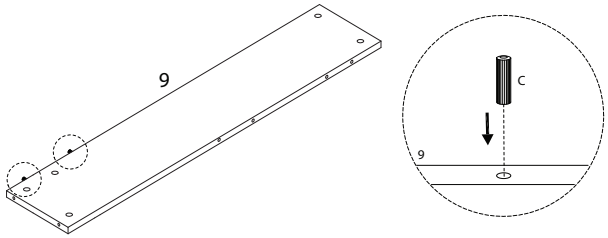

9

B

x 1

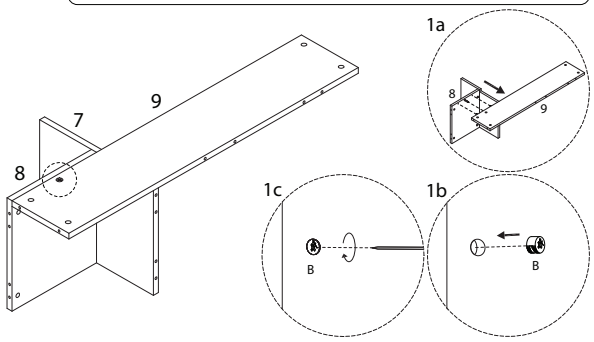

10

C

x 4

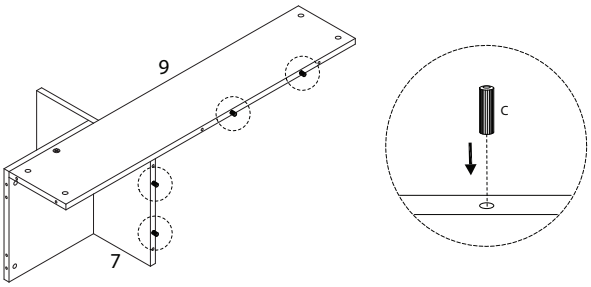

11

D

M5 x 40

x 4

G

x 1

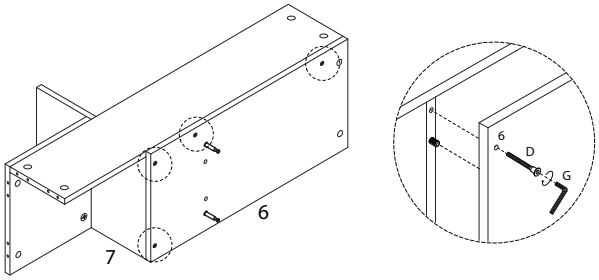

12

12

x 1

C

x 2

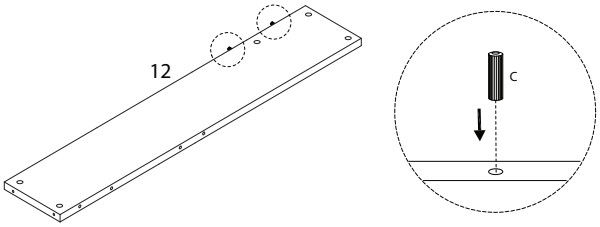

13

B

x 1

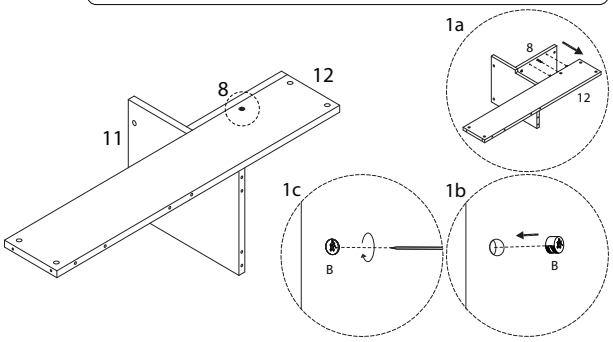

14

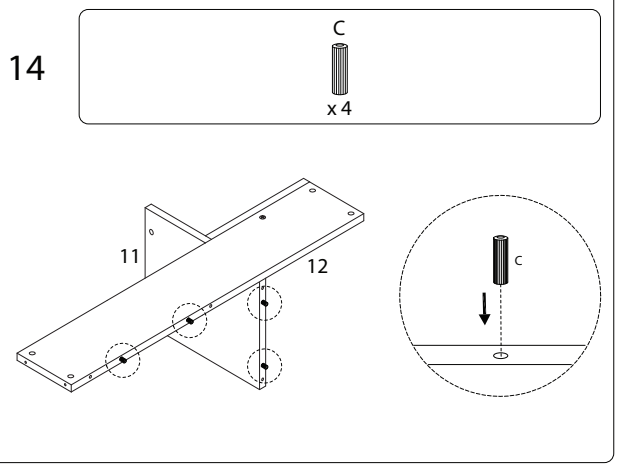

15

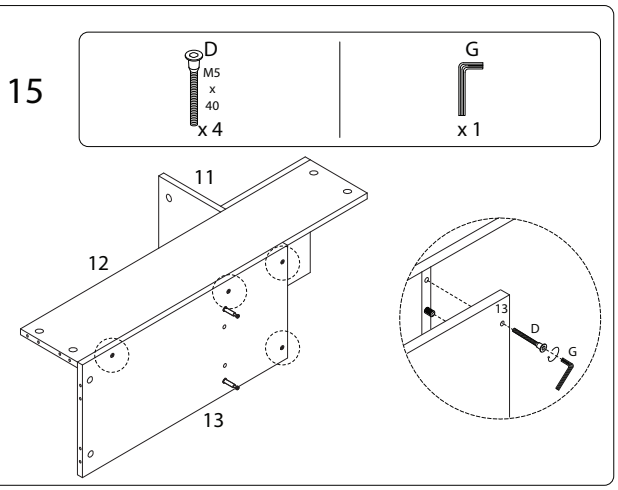

16

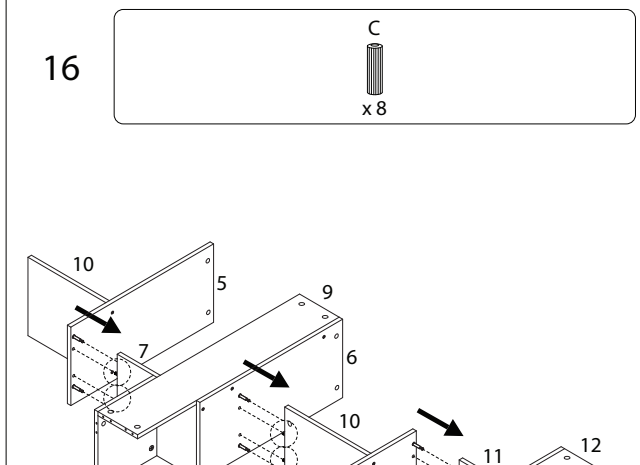

17

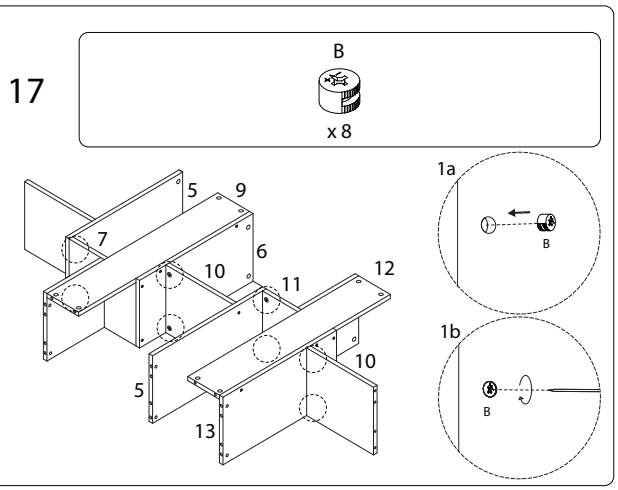

18

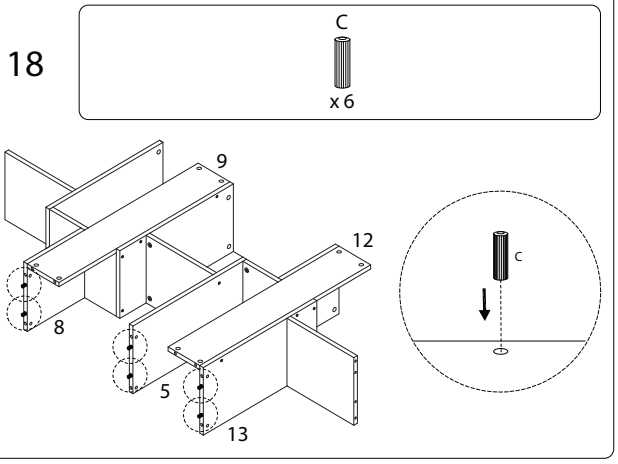

19

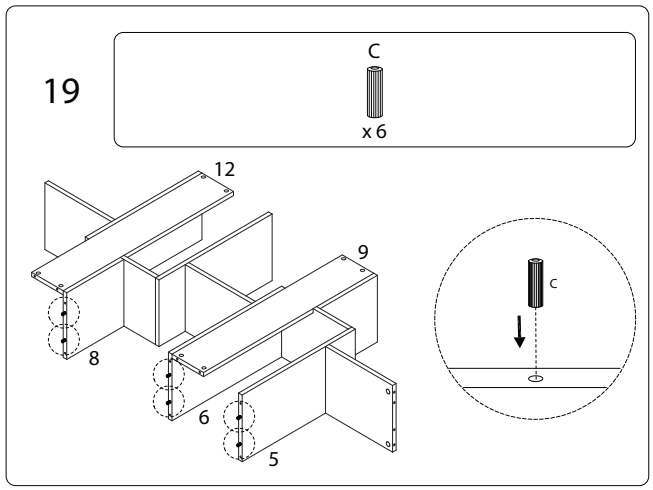

20

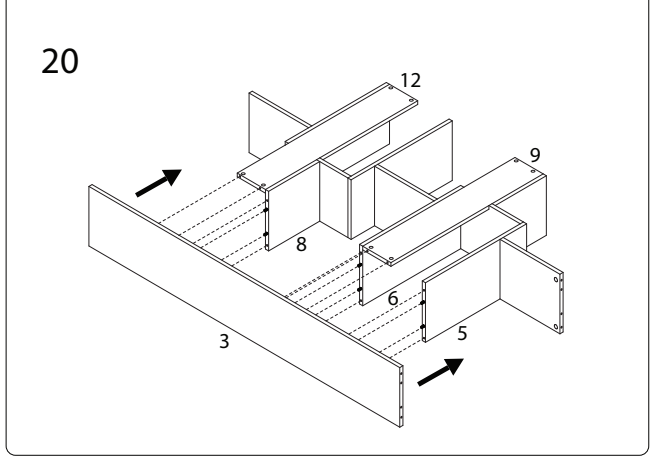

21

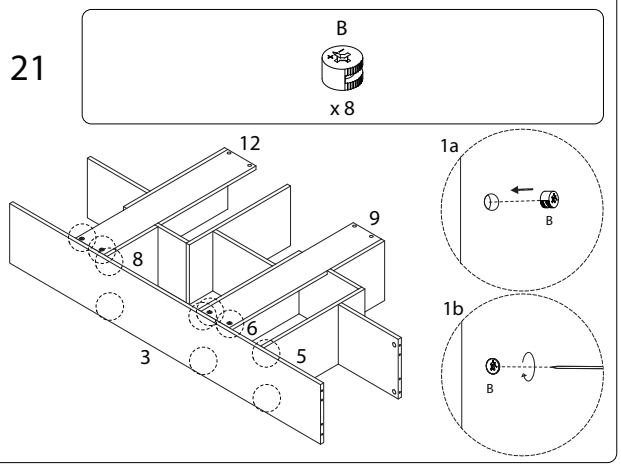

22

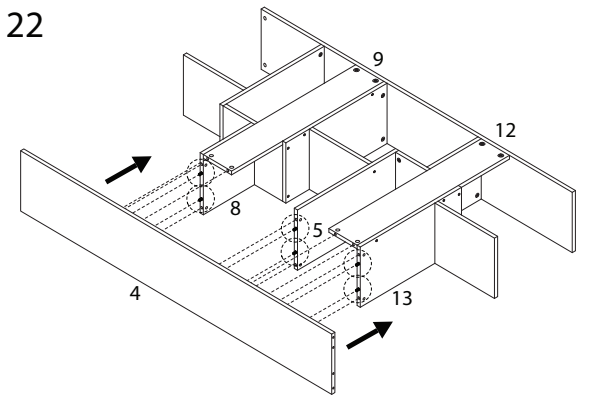

23

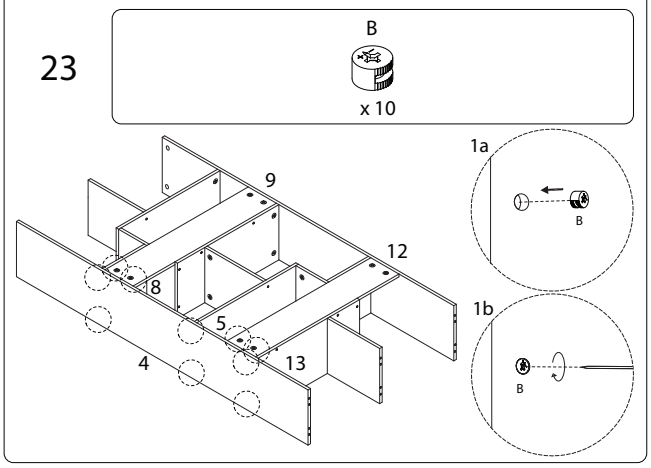

24

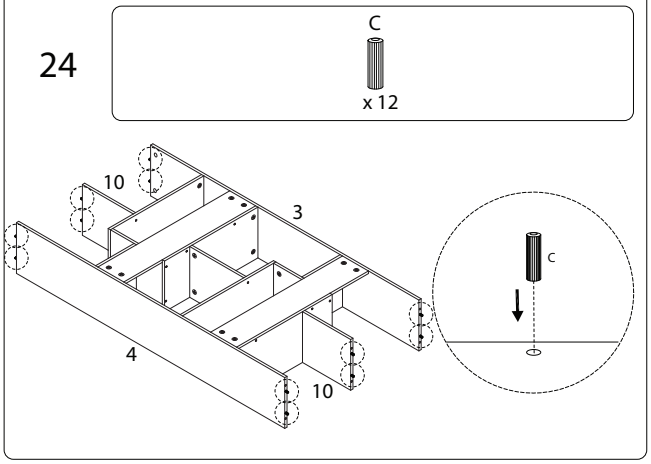

25

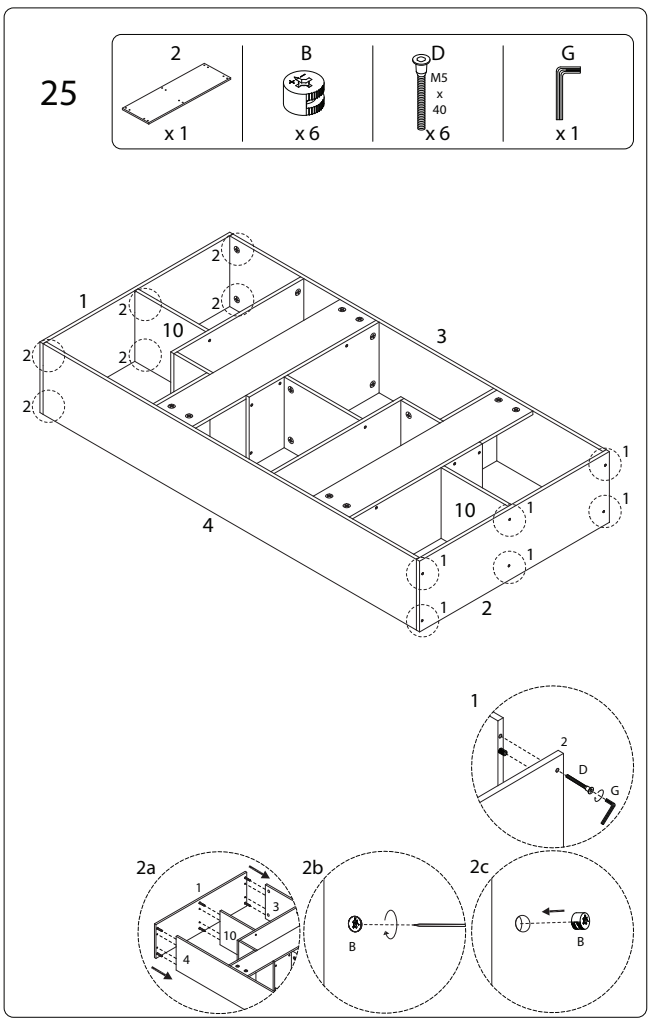

26

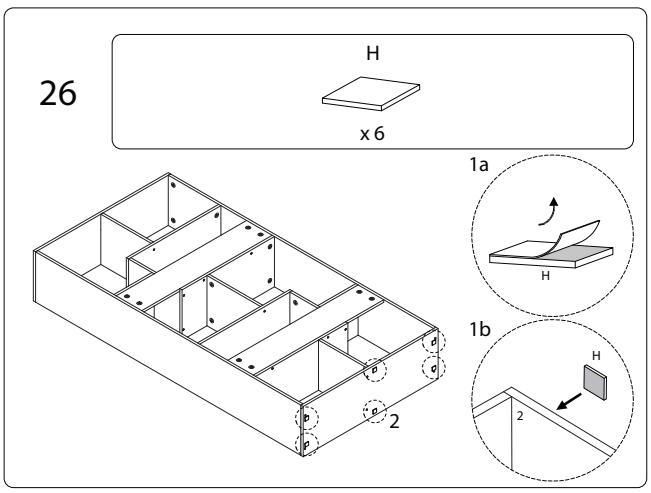

27

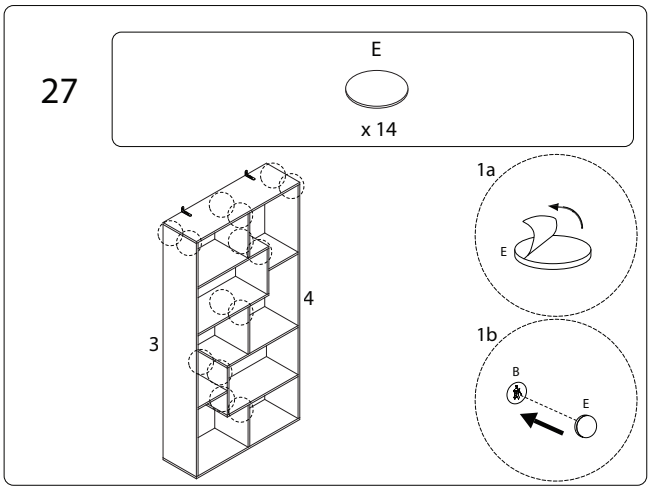

28

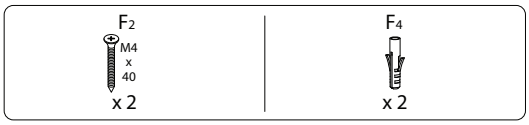

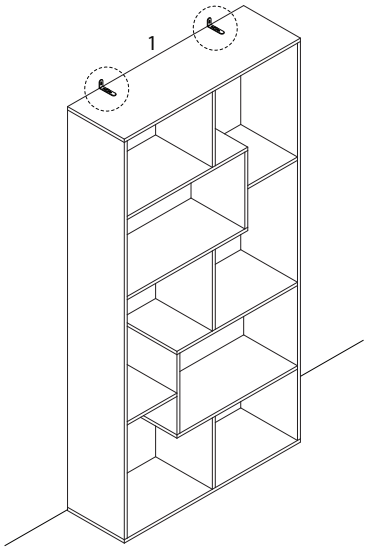

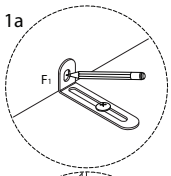

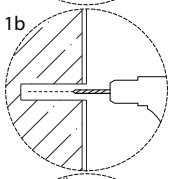

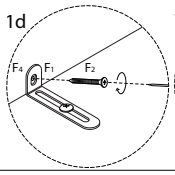

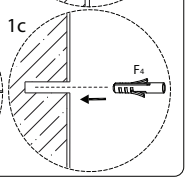

2335/CHATEH/221025/