MINERAL



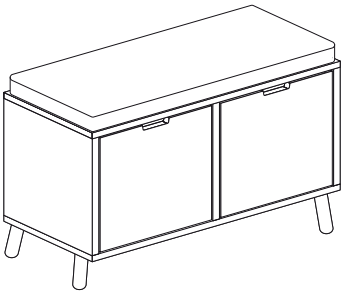

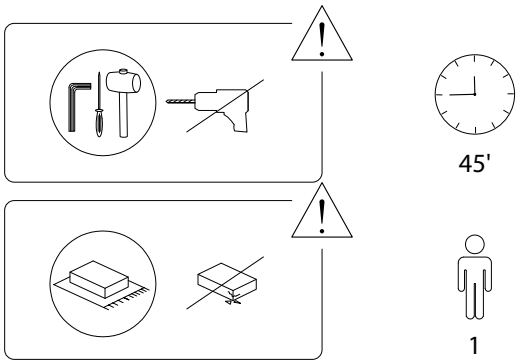
45'
1

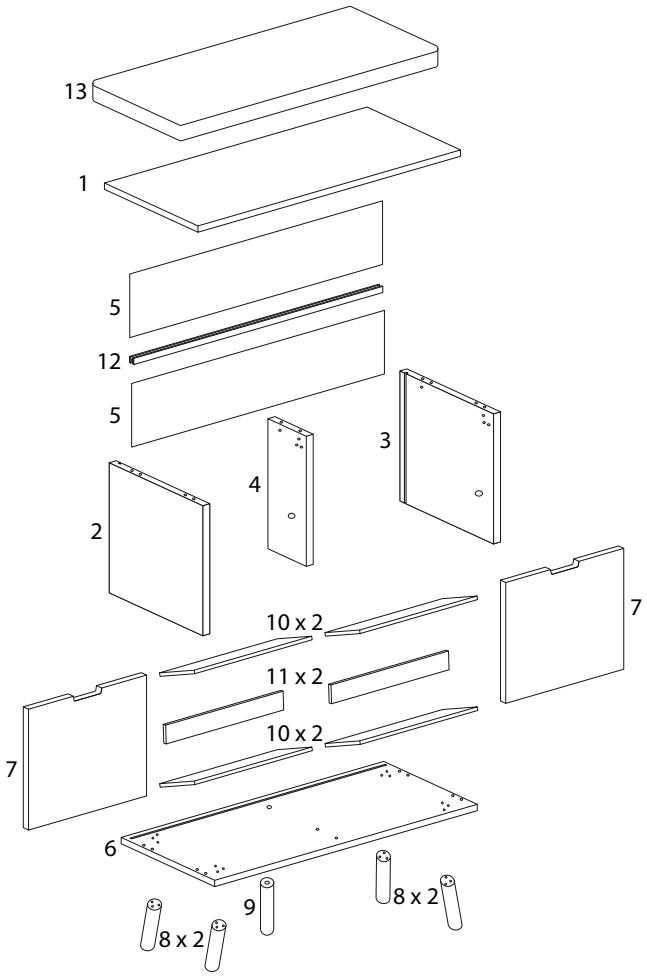
13
1
5
12
5
4
3
2
7
10 x 2
11 x 2
10 x 2
7
6
9
8 x 2
8 x 2

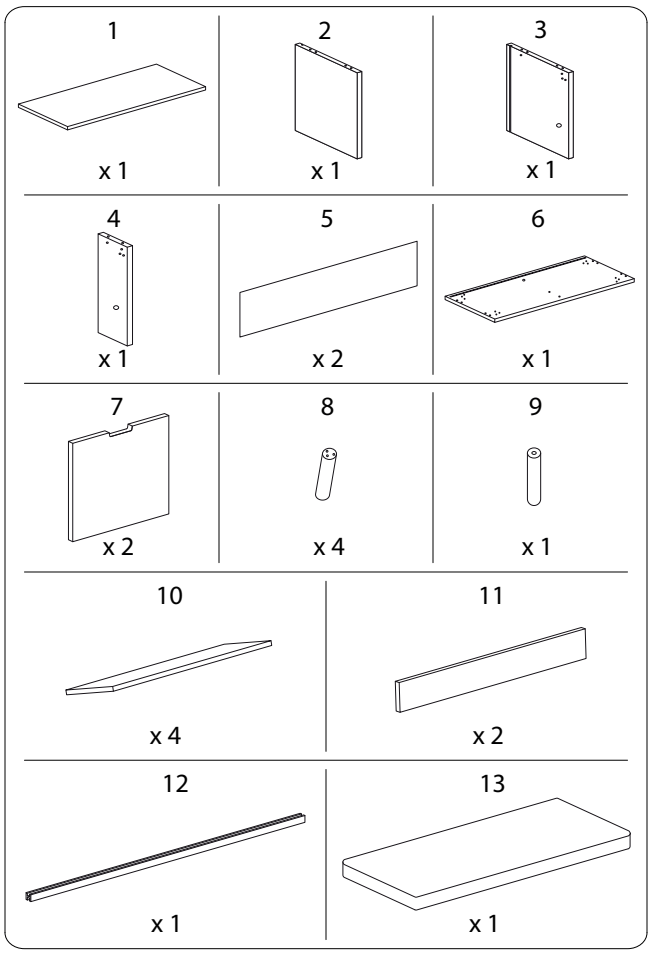
1
x 1
2
x 1
3
x 1
4
x 1
5
x 2
6
x 1
7
x 2
8
x 4
9
x 1
10
x 4
11
x 2
12
x 1
13
x 1

A	B	C
		
x 6	x 6	x 8
D	**E**	**F**
 M5 x 40	 M3 x 14	 M4 x 12
x 18	x 12	x 4
G	**H**	**I1**
		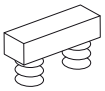
x 4	x 1	x 4
I2	**J**	**K**
	 M3 x 16	 M6 x 30
x 4	x 12	x 1
L	**M**	**N**
	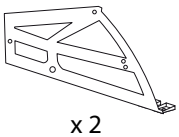	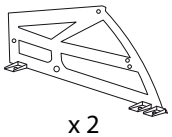
x 3	x 2	x 2

1 x 2

7	E	M	N
x 1	M3 x 14 x 6	x 1	x 1

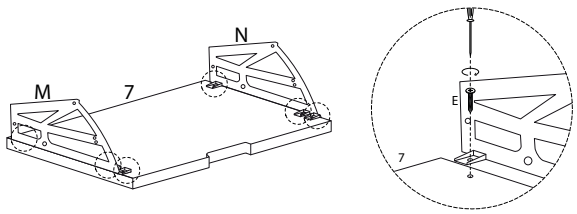

2 x 2

11	J
x 1	M3 x 16 x 2

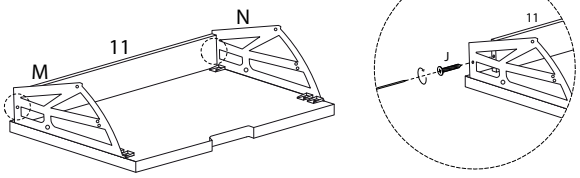

3 x 2

10	J
x 1	M3 x 16 x 2

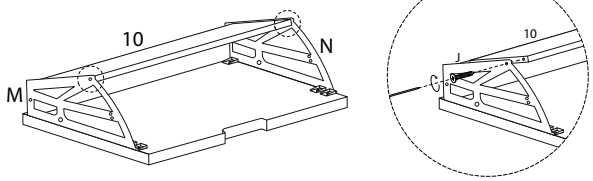

5

2	3	C
x 1	x 1	x 4

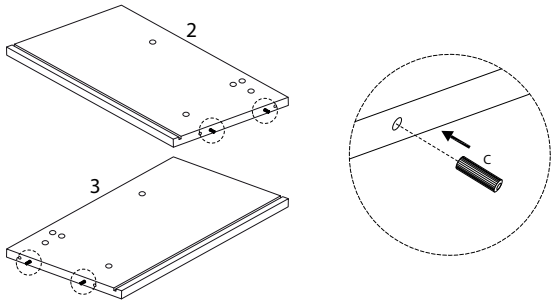

4

1	A
x 1	x 6

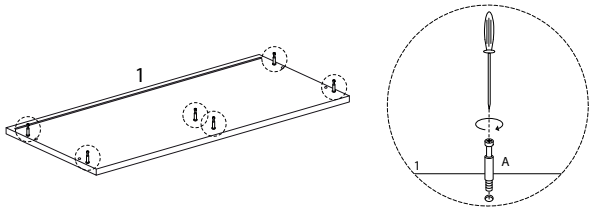

6

4	I1	I2
x 1	x 4	x 4

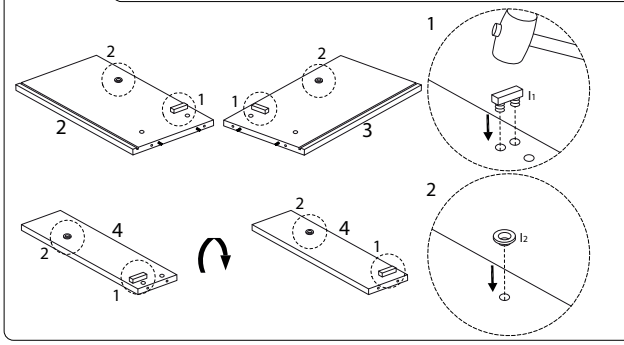

7

B
x 6

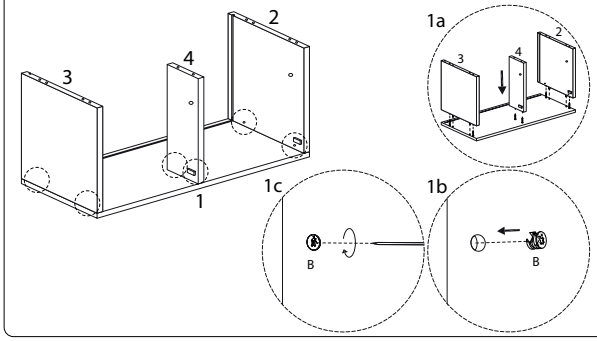

8

5
x 2

12
x 1

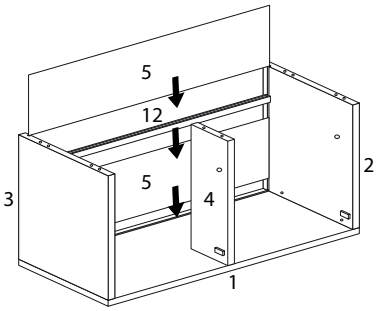

8/13

9

6	8	9	D	H	K
x 1	x 4	x 1	M5 x 40 x 12	x 1	M6 x 30 x 1

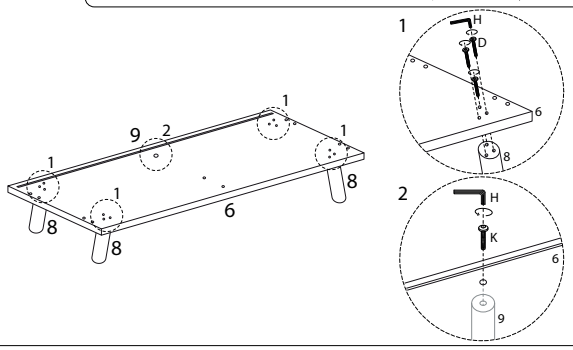

10

C
x 4

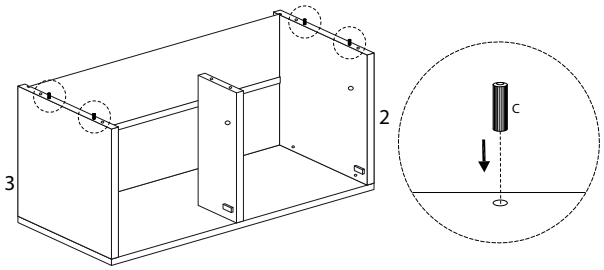

9/13

11

D
M5 x 40
x 6

H
x 1

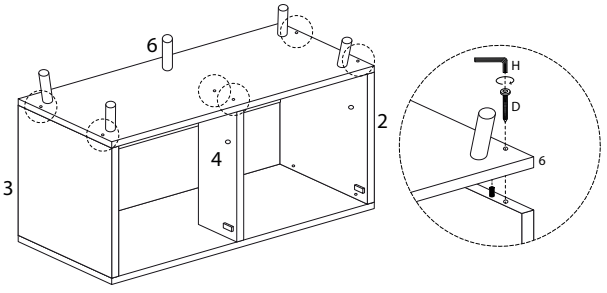

13

10
x 1

J
M3 x 16
x 2

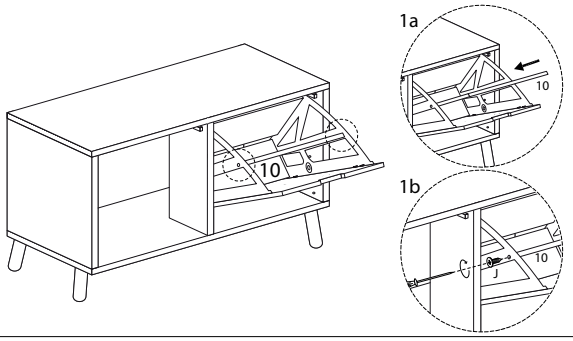

12

F
M4 x 12
x 2

G
x 2

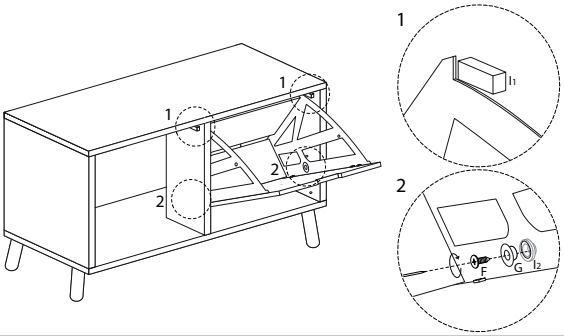

10/13

14

F
M4 x 12
x 2

G
x 2

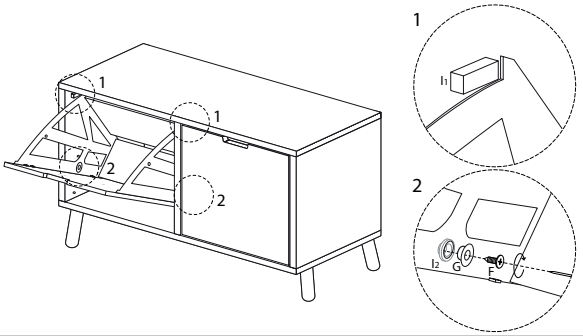

11/13

15

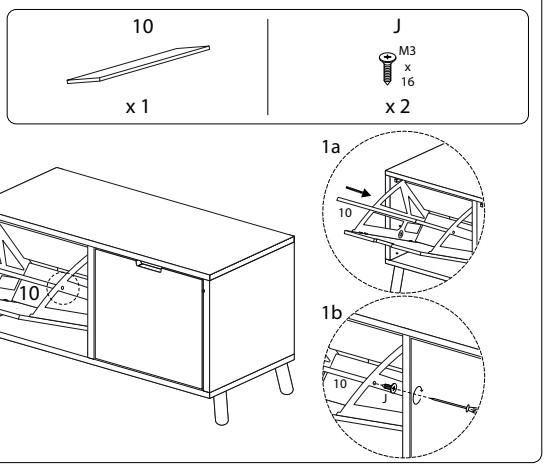

16

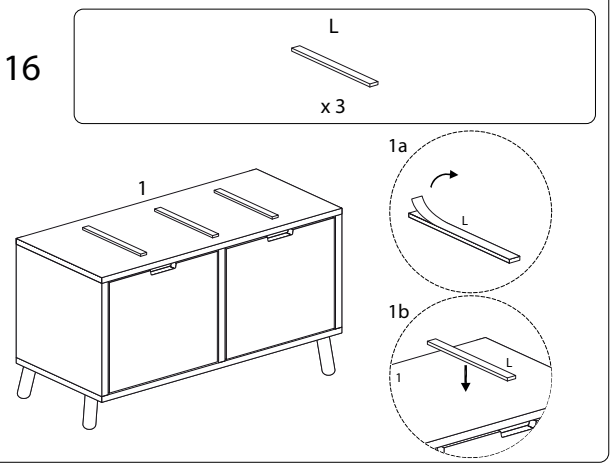

17

