WADENA

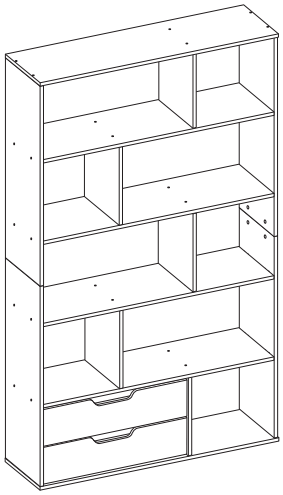

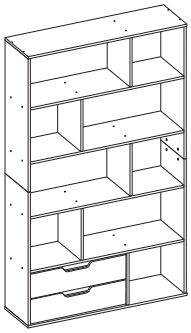

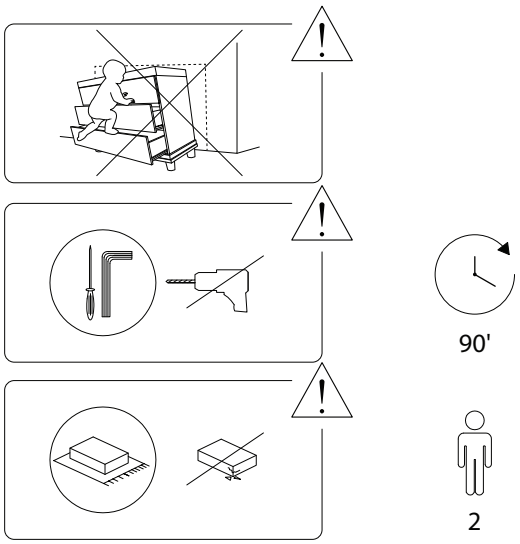
90'
2

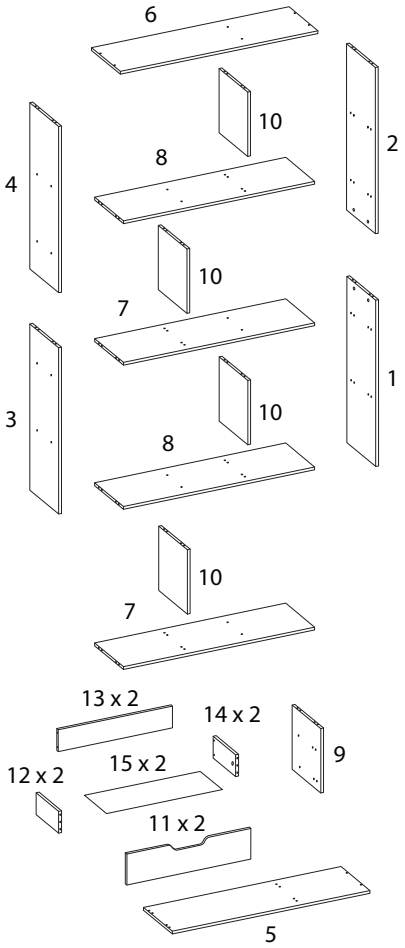
6
10
2
4
8
10
7
1
3
10
8
10
7
13 x 2
14 x 2
9
12 x 2
15 x 2
11 x 2
5

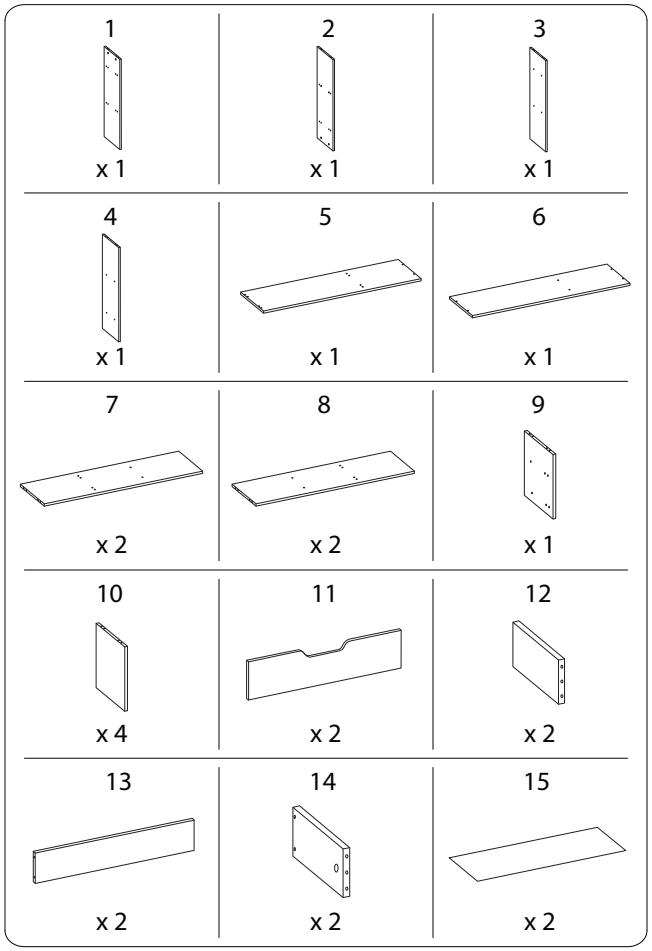
1
x 1
2
x 1
3
x 1
4
x 1
5
x 1
6
x 1
7
x 2
8
x 2
9
x 1
10
x 4
11
x 2
12
x 2
13
x 2
14
x 2
15
x 2

A_1 M6.4 x 50 x 44	A_2 x 44	A_3 x 1	B M8 x 30 x 60
B_2 M8 x 50 x 4	E M3.5 x 16 x 20	K_{4L1} x 2	K_{4L2} x 2
K_{4R1} x 2	K_{4R2} x 2	N2 x 6	R1 x 12
R2 x 4	R3 x 12	T M6.3 x 13 x 8	16 x 4
W_3 x 1			

1 x 2

7 x 1	8 x 1	10 x 2	B M8 x 30 x 16

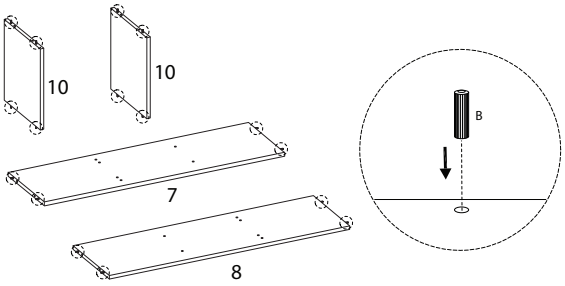

2

9 x 1	B M8 x 30 x 4	K_{4R1} x 2	T M6.3 x 13 x 4

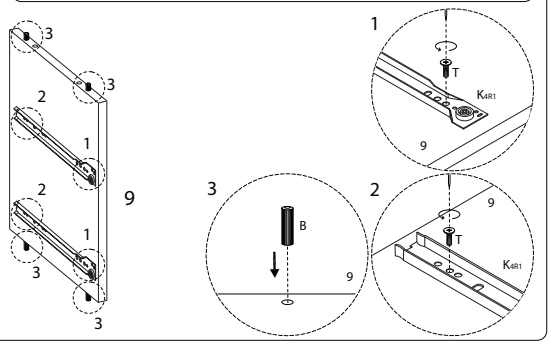

3

A_1 M6.4 x 50 x 16	A_3 x 1

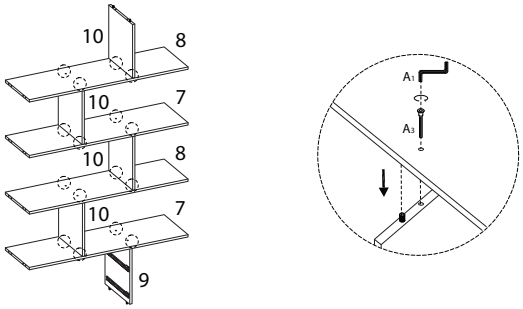

5

1 x 1	2 x 1	4 x 1	B M8 x 30 x 6

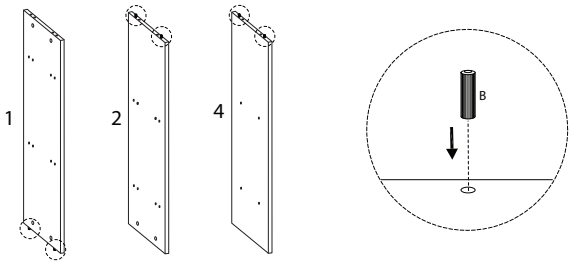

4

3 x 1	B M8 x 30 x 2	K_{4L1} x 2	T M6.3 x 13 x 4

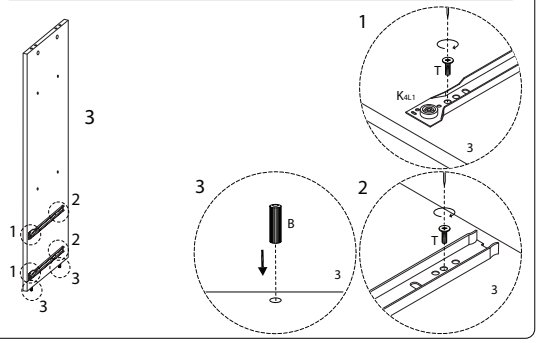

6

B_2 M8 x 50 x 4	R_4 x 4

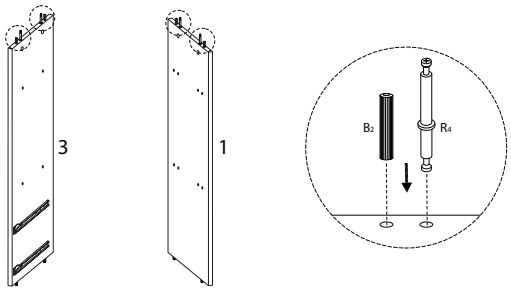

7

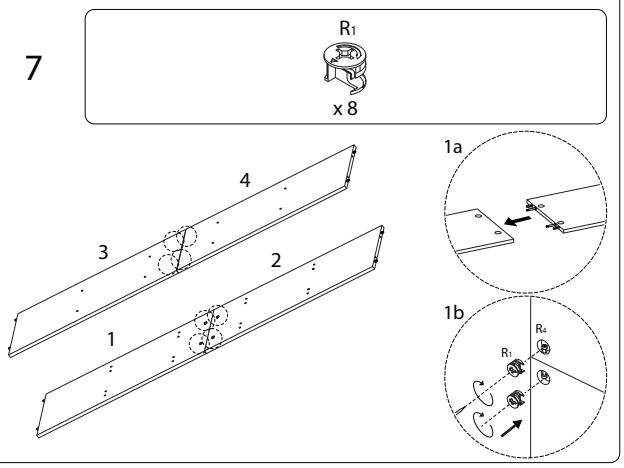

8

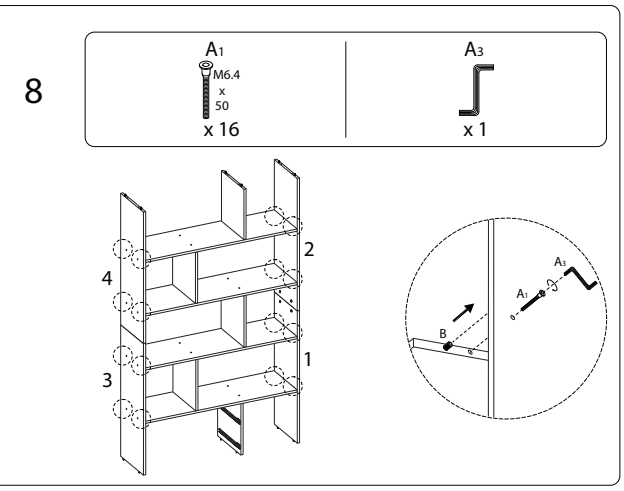

9

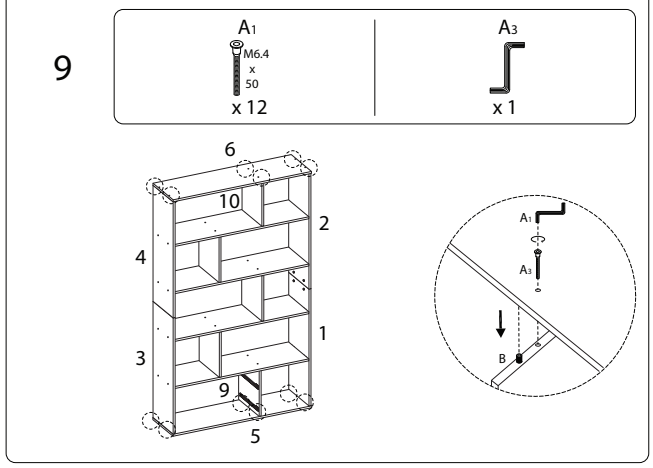

10 x 2

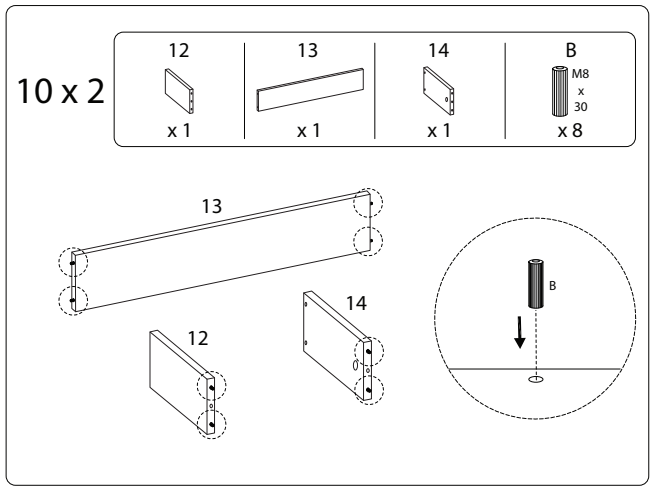

11 x 2

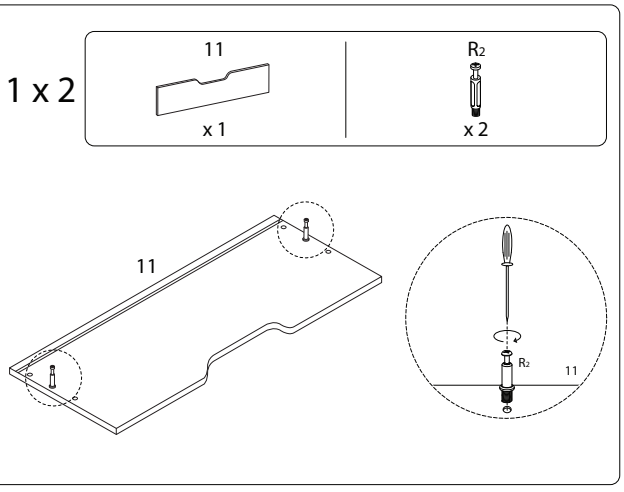

12 x 2

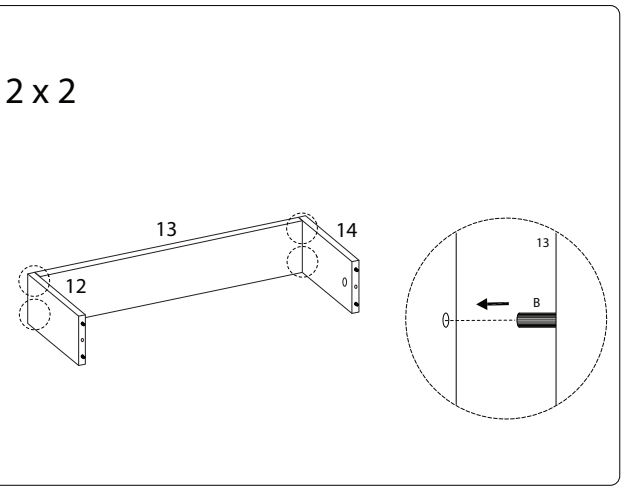

13 x 2

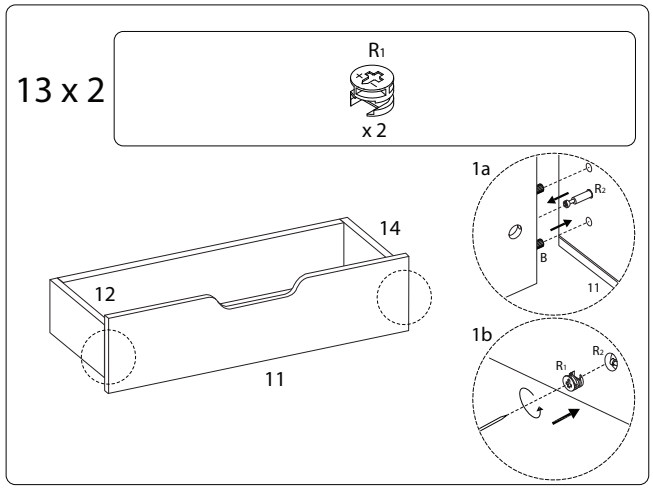

14 x 2

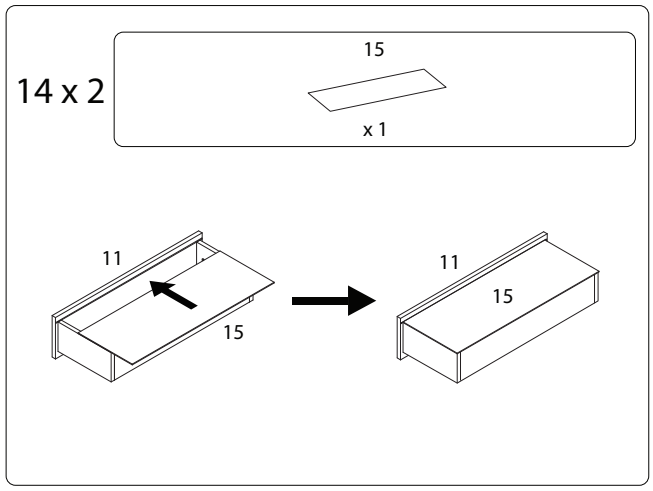

15 x 2

E	K_{4L2}	K_{4R2}
M3.5 x 16		
x 4	x 1	x 1

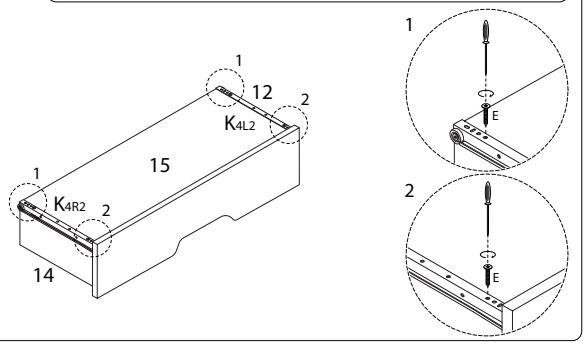

16 x 2

E
M3.5 x 16
x 5

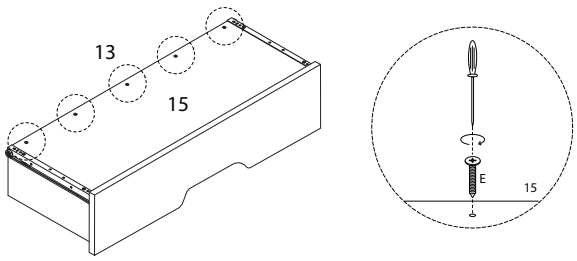

17

R_3
x 4

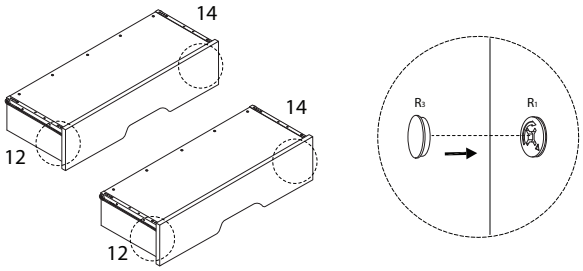

18

R_3
x 8

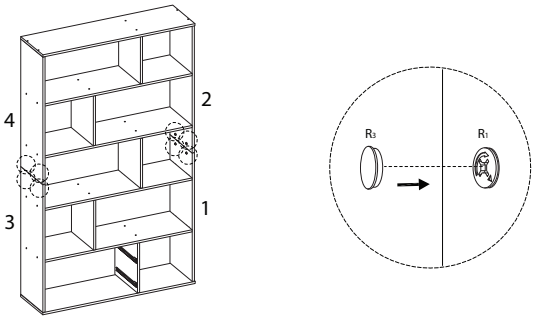

19

A_2
x 44

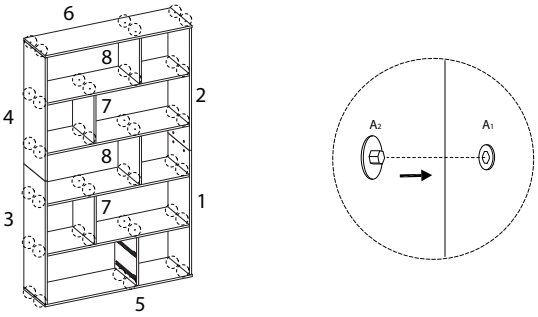

20

N_2
x 6

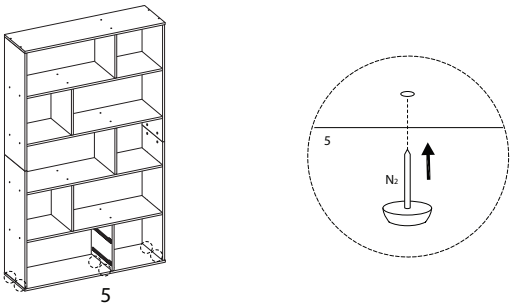

21

E	W3
M3.5 x 16	
x 2	x 1

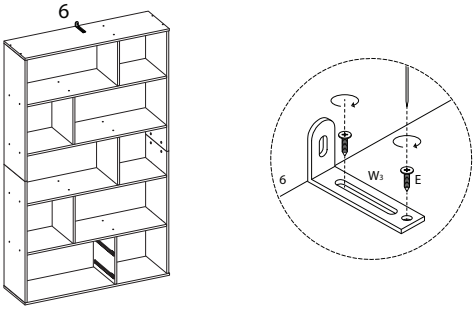

!

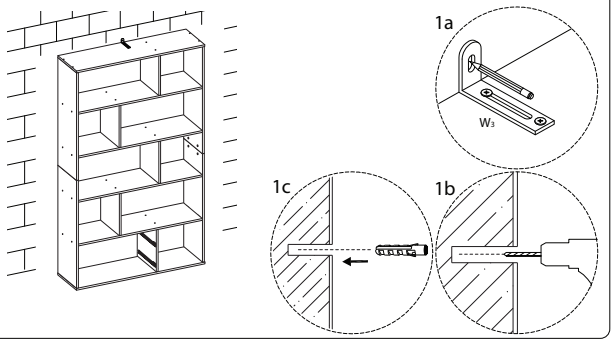

!

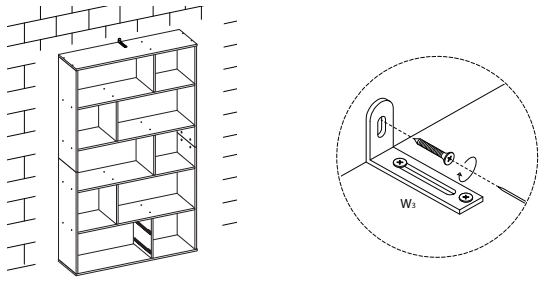

22

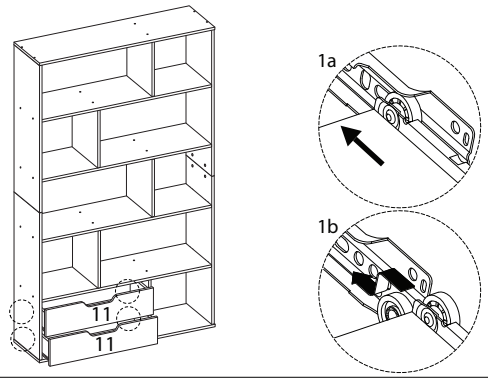

2474/WADENA/191224/