BOLLON



1/8

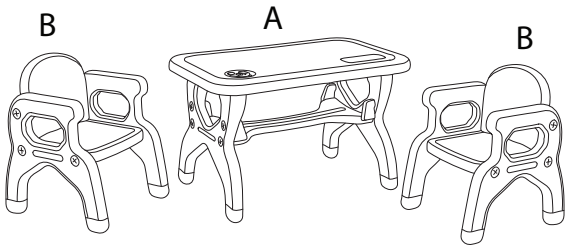

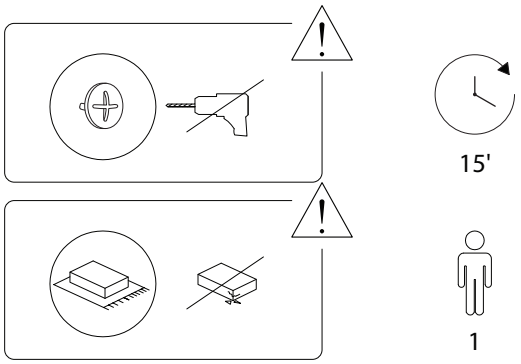

2/8

2902/BOLLON/160926/

A

1	2	3
x 4	x 8	x 1

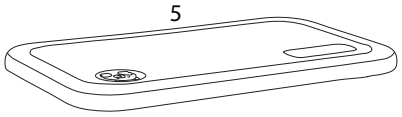

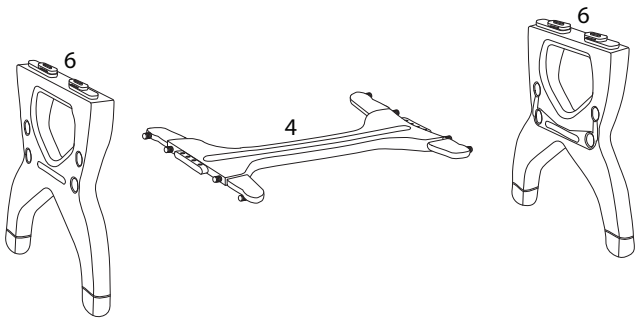

4	5	6
x 1	x 1	x 2

3/8

2902/BOLLON/160926/

1 x 2

1	6
x 2	x 1

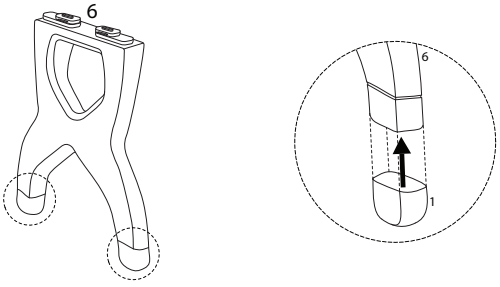

2

2	3	4
x 8	x 1	x 1

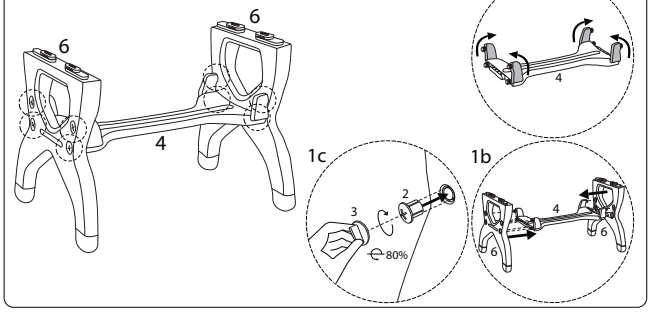

4/8

2902/BOLLON/160926/

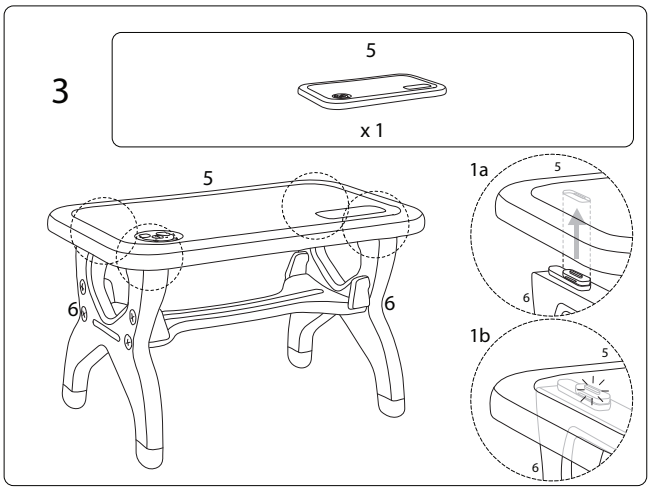
3
5
x 1
5
6
6
1a
5
6
1b
5
6

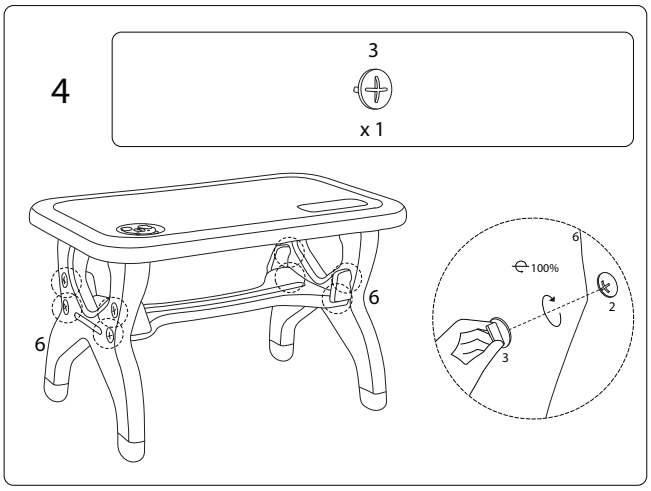
4
3
x 1
6
6
6
100%
2
3

B x 2

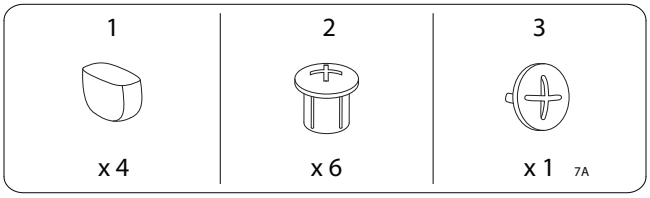
1
x 4
2
x 6
3
x 1
7A

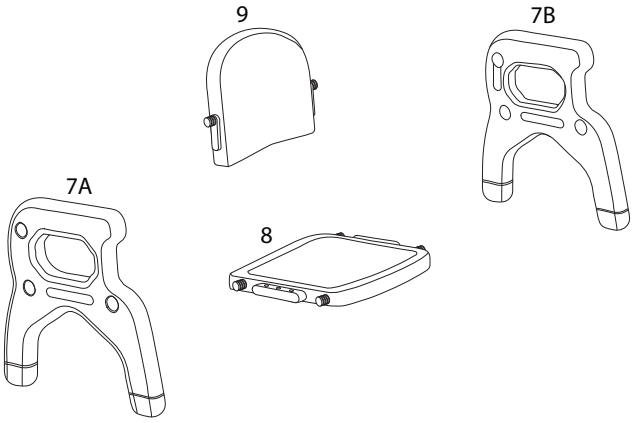
9
7B
7A
8

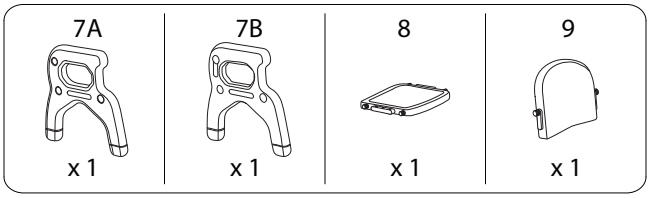
7A
x 1
7B
x 1
8
x 1
9
x 1

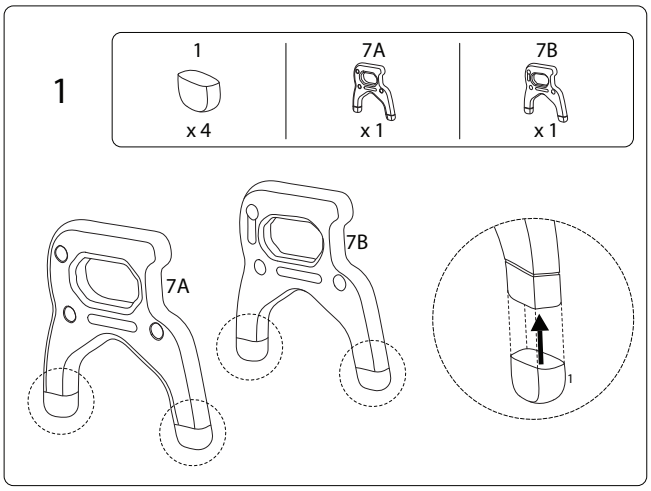
1
1
x 4
7A
x 1
7B
x 1
7A
7B
1

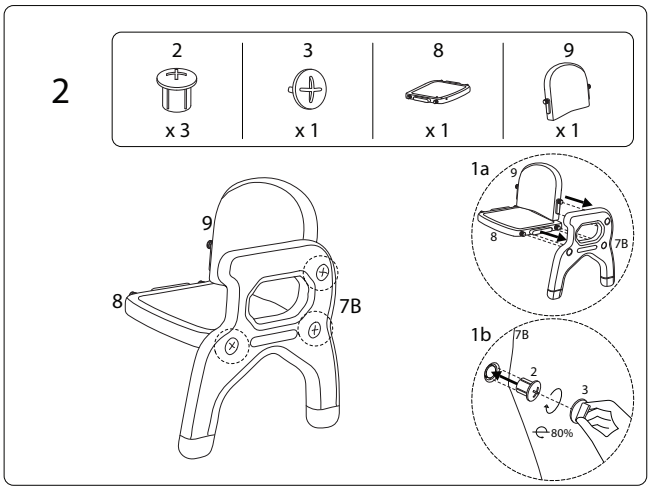
2
2
x 3
3
x 1
8
x 1
9
x 1
9
8
7B
1a
9
8
7B
1b
7B
2
3
80%

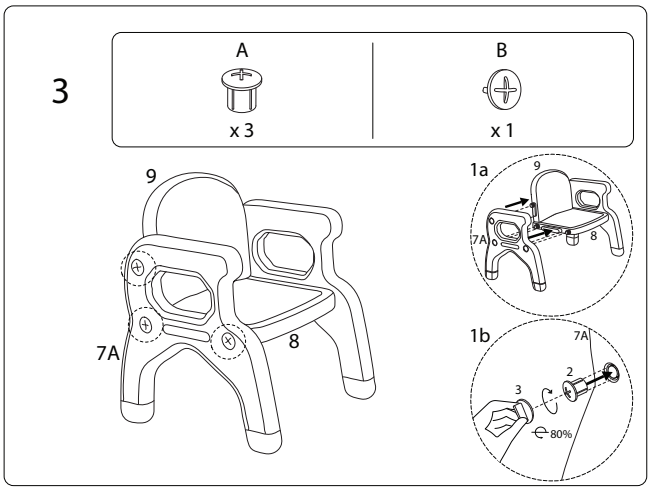
3
A
x 3
B
x 1
9
7A
8
1a
9
7A
8
1b
7A
2
3
80%

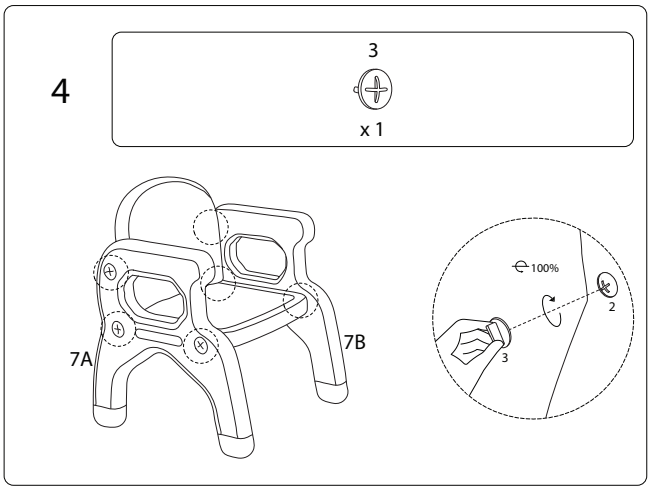
4
3
x 1
7A
7B
100%
2
3