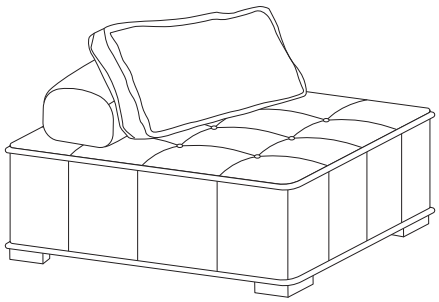

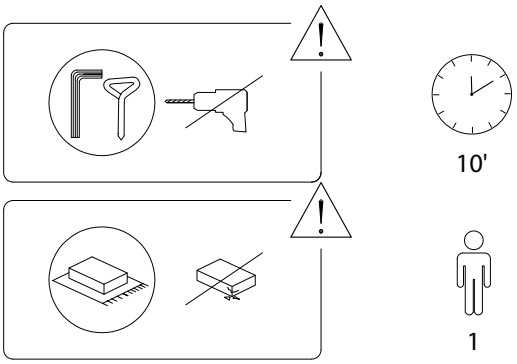

1/5

1082/TIBRO/110821/

A	B	C	D	E
				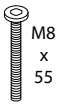 M8 x 55
x 1	x 1	x 1	x 4	x 8

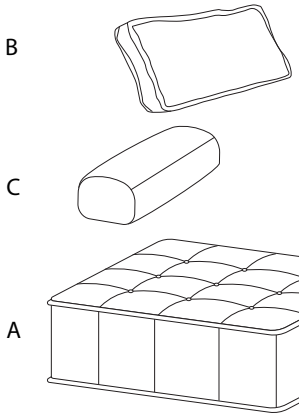

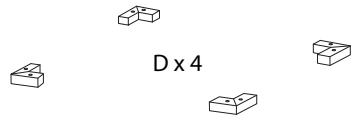

F	G	H	I	J
	 M4 x 30			
x 1	x 10	x 1	x 8	x 1

2/5

1082/TIBRO/110821/

1

A

x 1

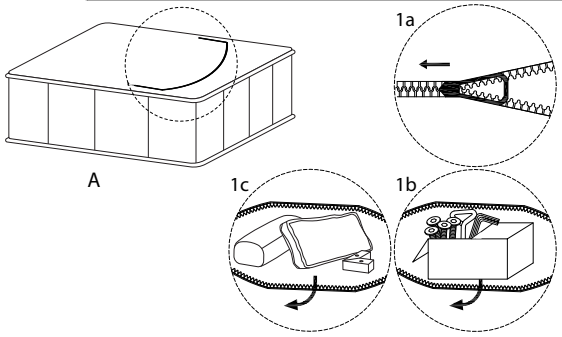

!

J

x 1

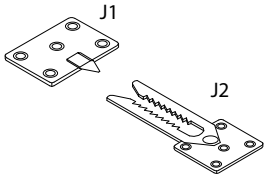

2

D	E	F	I
	 M8 x 55		
x 4	x 8	x 1	x 8

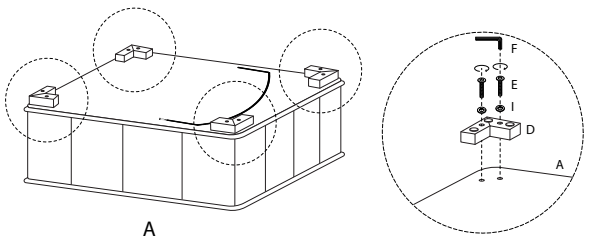

3/5

1082/TIBRO/110821/

3

G	H	J1	J2
 M4 x 30			
x 10	x 1	x 1	x 1

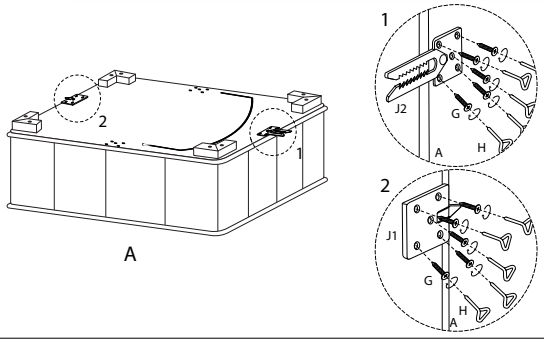

4/5

1082/TIBRO/110821/

4

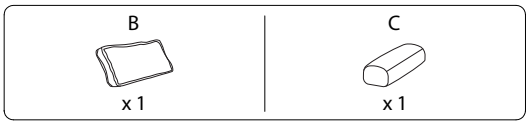

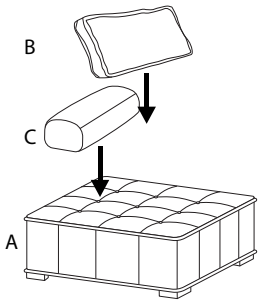

!

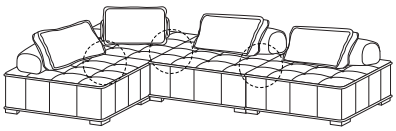

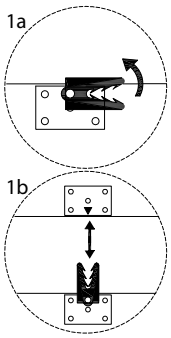

1082/TIBRO/110821/