Installation sanleitung
Installation Instruction
Installation d'installation

SKU NUMBER:N636P312409

Daybett 90 x 200CM

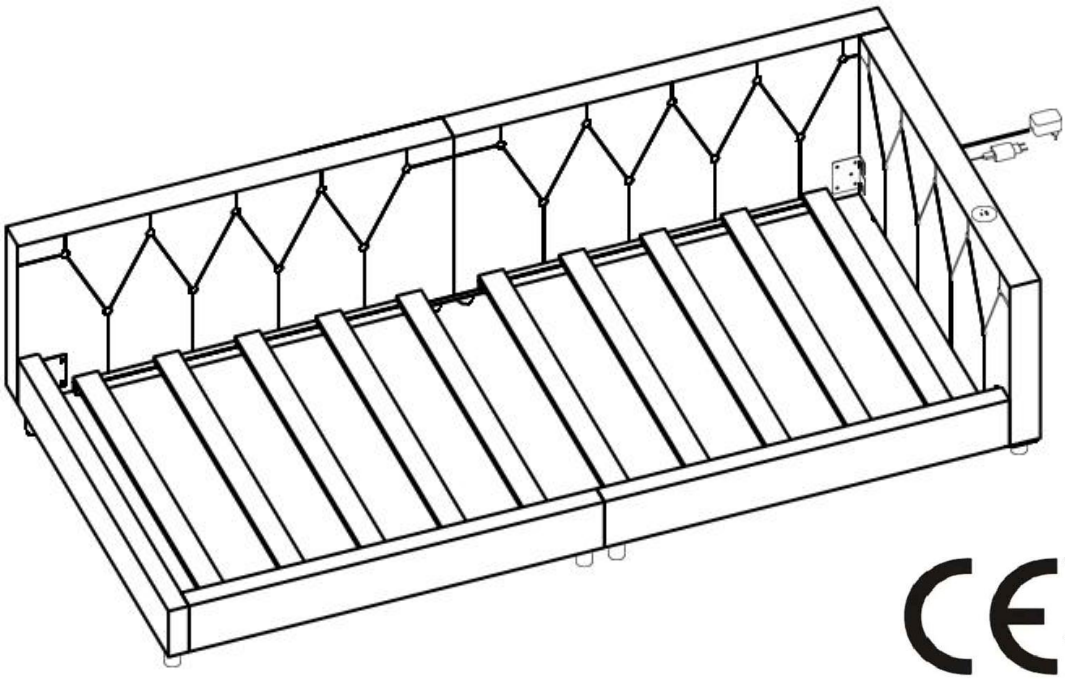

GB This set comes in 1 box. If you do not receive a full set, please contact our customer service.

DE Dieses Set wird in 1 Schachteln geliefert. Ist es kein vollständiger katalog, kontaktieren Sie bitte unseren Kundenservice

FR Cet ensemble est livré avec 1 boîte. Si vous ne recevez pas le produit complet, veuillez contacter notre service clientèle.

English

IMPORTANT ! KEEP FOR FUTURE REFERENCE : READ CAREFULLY

- To be assembled by an adult. Assembly must be checked by an adult before use
- WARNING ! Keep all screws, small parts and plastic bags out of the reach of children
- Properly identify all parts before assembling
- Never use your item if any of its parts are broken or missing
- Should any problems arise, please contact our After Sales Service
- Manufacturer's instructions shall be followed at all times
- Care: Clean with a soft, dry cloth. In case of larger stains, carefully rub with a slightly damp, non-abrasive sponge
- Avoid the risk of fire by not placing furniture near sources of ignition or hot items
- Do not jump on the bed

Deutsch

WICHTIG ! ZUM SPÄTEREN NACHSCHLAGEN AUFBEWAHREN: SORGFÄLTIG LESEN

- Muss von einem Erwachsenen zusammengebaut werden.Der Zusammenbau muss vor dem Gebrauch von einem Erwachsenen überprüft werden
- WARNUNG! Bewahren Sie alle Schrauben, Kleinteile und Plastikbeutel außerhalb der Reichweite von Kindern auf
- Kennzeichnen Sie vor dem Zusammenbau alle Teile richtig
- Benutzen Sie Ihren Artikel niemals, wenn Teile gebrochen sind oder fehlen
- Sollten Probleme auftreten, wenden Sie sich bitte an unseren Kundendienst
- Die Anweisungen des Herstellers sind stets zu befolgen
- Pflege: Mit einem weichen, trockenen Tuch reinigen. Bei größeren Flecken vorsichtig mit einem leicht feuchten, nicht scheuernden Schwamm abreiben. nicht scheuernden Schwamm
- Vermeiden Sie die Gefahr eines Brandes, indem Sie die Möbel nicht in der Nähe von Zündquellen oder heißen Gegenständen aufstellen
- Nicht auf das Bett springen

Français

IMPORTANT ! CONSERVER POUR RÉFÉRENCE ULTÉRIEURE : LIRE ATTENTIVEMENT

- Le montage doit être effectué par un adulte. Le montage doit être vérifié par un adulte avant Utilisation
- ATTENTION ! Tenir les vis, les petites pièces et les sachets en plastique hors de portée des enfants
- Identifiez correctement toutes les pièces avant de les assembler
- N'utilisez jamais votre article si l'une de ses pièces est cassée ou manquante
- En cas de problème, veuillez contacter notre service après-vente
- Les instructions du fabricant doivent être respectées à tout moment
- Entretien : nettoyer avec un chiffon doux et sec. En cas de taches plus importantes, frotter soigneusement avec une éponge non abrasive légèrement humide. légèrement humide et non Abrasive
- Évitez les risques d'incendie en ne plaçant pas les meubles à proximité de sources d'inflammation ou d'objets chauds
- Ne pas sauter sur le lit

Italiano

IMPORTANTE! CONSERVARE PER RIFERIMENTO FUTURO: LEGGERE ATTENTAMENTE

- Deve essere assemblato da un adulto. L'assemblaggio deve essere controllato da un adulto prima dell'uso
- ATTENZIONE! Tenere tutte le viti, le piccole parti e i sacchetti di plastica fuori dalla portata dei bambini
- Identificare correttamente tutte le parti prima dell'assemblaggio
- Non utilizzare mai l'articolo se alcune parti sono rotte o mancanti
- In caso di problemi, si prega di contattare il nostro Servizio Post Vendita
- Le istruzioni del produttore devono essere sempre seguite
- Cura: Pulire con un panno morbido e asciutto. In caso di macchie più estese, strofinare accuratamente con una spugna leggermente umida e nonspugna leggermente umida e non abrasiva
- Evitare il rischio di incendio, non collocando i mobili vicino a fonti di accensione o a oggetti caldi
- Non saltare sul letto

Español

¡ IMPORTANTE ! CONSÉRVELO PARA FUTURAS CONSULTAS: LEA ATENTAMENTE

- Debe ser montado por un adulto. El montaje debe ser comprobado por un adulto antes del uso

ADVERTENCIA Mantenga todos los tornillos, piezas pequeñas y bolsas de plástico fuera del alcance de los niños.

- Identifique correctamente todas las piezas antes de montarlas
- Nunca utilice su artículo si alguna de sus piezas está rota o falta
- Si surge algún problema, póngase en contacto con nuestro Servicio Postventa
- Las instrucciones del fabricante deben seguirse en todo momento
- Cuidado: Limpiar con un paño suave y seco. En caso de manchas más grandes, frote cuidadosamente con una esponja no abrasiva ligeramente humedecida.
- Evite el riesgo de incendio no colocando los muebles cerca de fuentes de ignición u objetos calientes.
- No saltar sobre la cama.

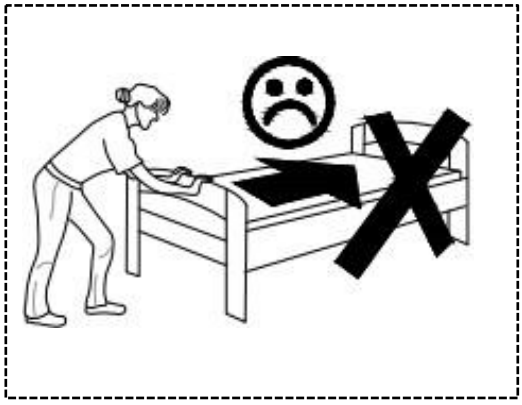

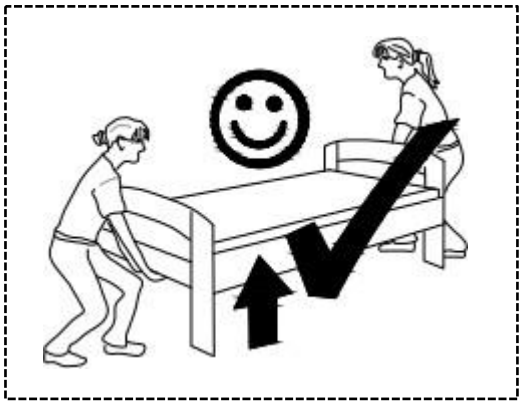

DE:Vor dem Einbau die Schrauben in die Löcher stecken und festziehen, aber nicht bis 100%, 70% bis 80% anziehen reicht aus. Schließlich, nachdem alle Schrauben installiert sind, ziehen Sie alle Schrauben auf 100%. Wenn Sie auf diese Probleme stoßen, wie z. B. Fehlausrichtung der Löcher oder Unfähigkeit, bestimmte Teile zu installieren, überprüfen Sie bitte, ob die Schrauben korrekt verwendet werden und passen Sie die Dichtigkeit der Schrauben an.

UK:Before installation, insert the screws into the holes and tighten them, but do not tighten them to 100%, 70% to 80% is sufficient. Finally, after all screws are installed, tighten all screws to 100%.
If you encounter these issues, such as if the holes cannot be aligned or some parts cannot be installed, please check if the screws are used correctly and adjust the tightness of the screws.

FR:Insérer la vis dans le trou avant la fin de l'assemblage, serrer la vis, mais ne pas serrer à 100%, 70% ~ 80% est correct. Enfin, une fois que toutes les vis sont bien serrées, toutes les vis sont serrées à 100%.
Si vous rencontrez ces problèmes, par exemple si les trous ne sont pas alignés ou si certaines pièces ne peuvent pas être montées, vérifiez que les vis sont utilisées correctement et Ajustez leur serrage.

EINE TEILLISTE
DEN HARDWARE KRAM

1

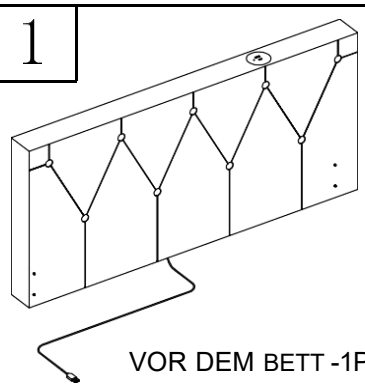

VOR DEM BETT -1PC

2

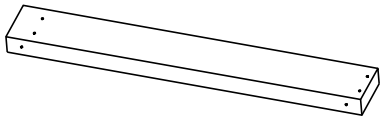

Ende des Bettes-1PC

3

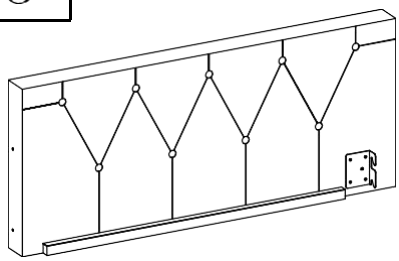

VORNE LINKS-1PC

4

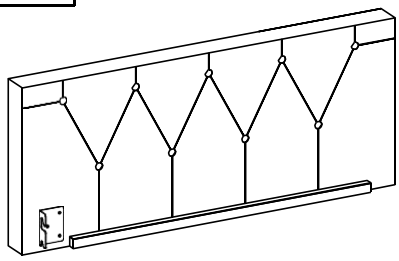

VORNE RECHTS-1PC

5

RECHTS HINTEN -1PC

6

VORNE RECHTS-1PC

7

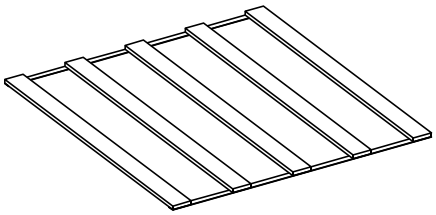

BETTSTÜTZE- 2PCS

8

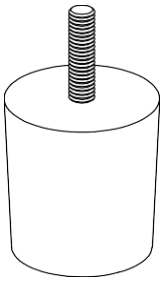

FUSS - 8PCS

DIAGRAMM

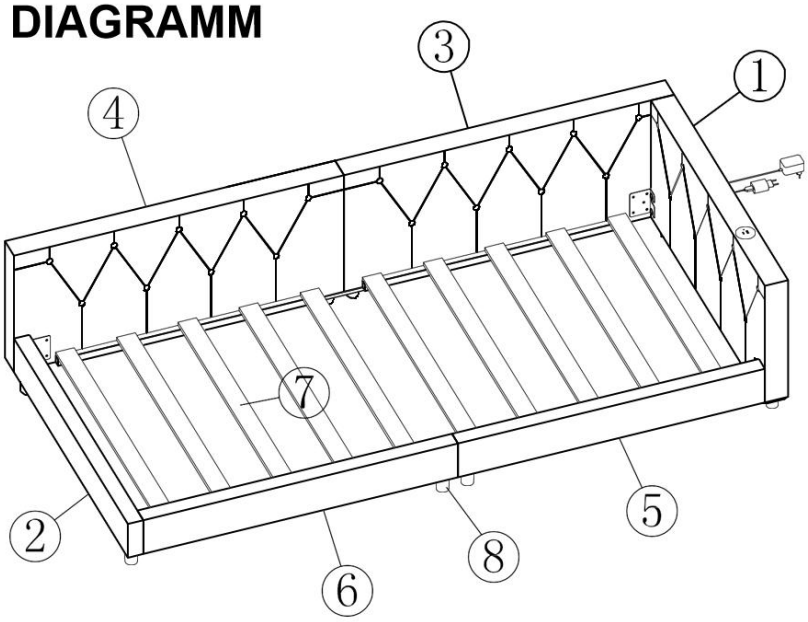

LISTE DER METALLE

Bolzen M8x25 mm-10PCS

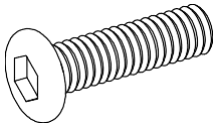

A

Bolzen M8x45 mm-2PCS

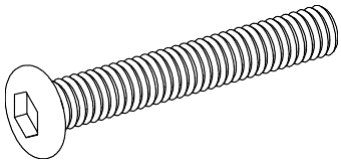

B

Unterlegscheibe-12PCS

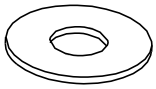

C

Dichtung:φ45mm*m10*1.5-8PCS

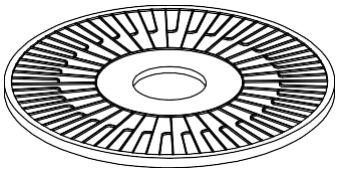

D

SUPPORT-BAR-LINK-1PC

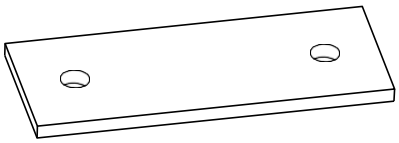

E

Lichtband-1PC

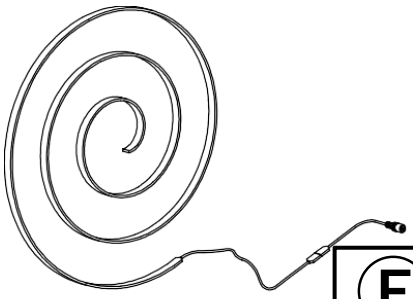

F

Lichtband-Adapter-1PC

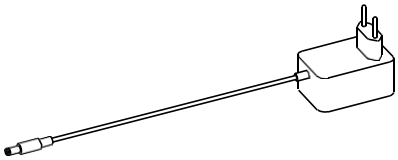

G

CT11-Adapter-1PC

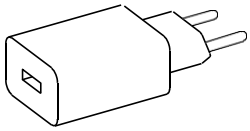

H

SPERREN-M5*100*40mm -1PC

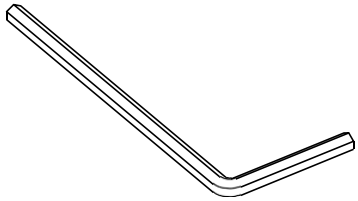

J

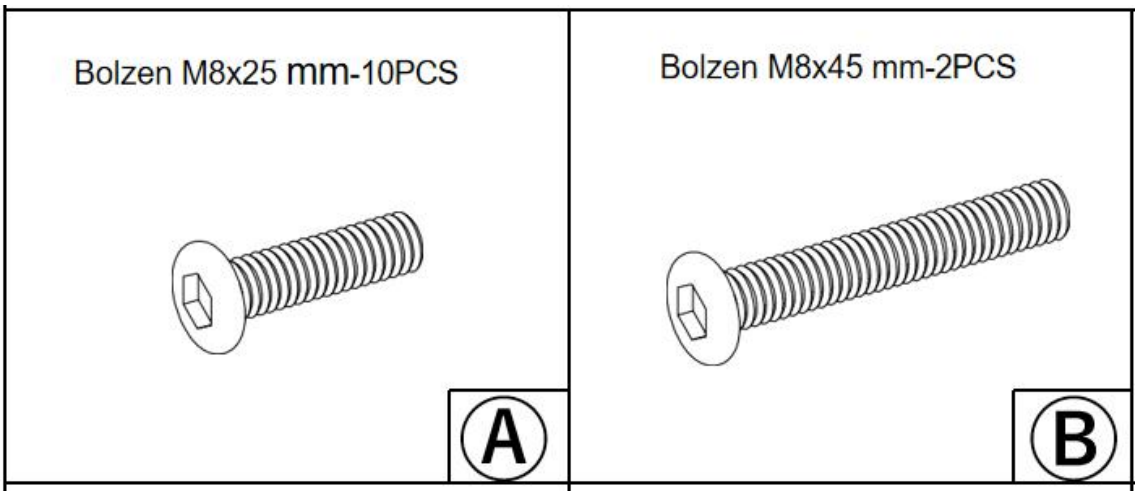

DE: Bitte beachten Sie, dass die Formen der Schrauben (A) und (B) . Bitte installieren Sie entsprechend der Anleitung und unterscheiden Sie sie!

UK: Please note that the shapes of screws (A) and (B) .Please install according to the instructions and distinguish them!

FR: Notez que les vis (A) et (B) ont des formes similaires. Veuillez les installer en suivant les instructions pour les séparer!

INSTALLATION STEPS

SSCHRITT 1

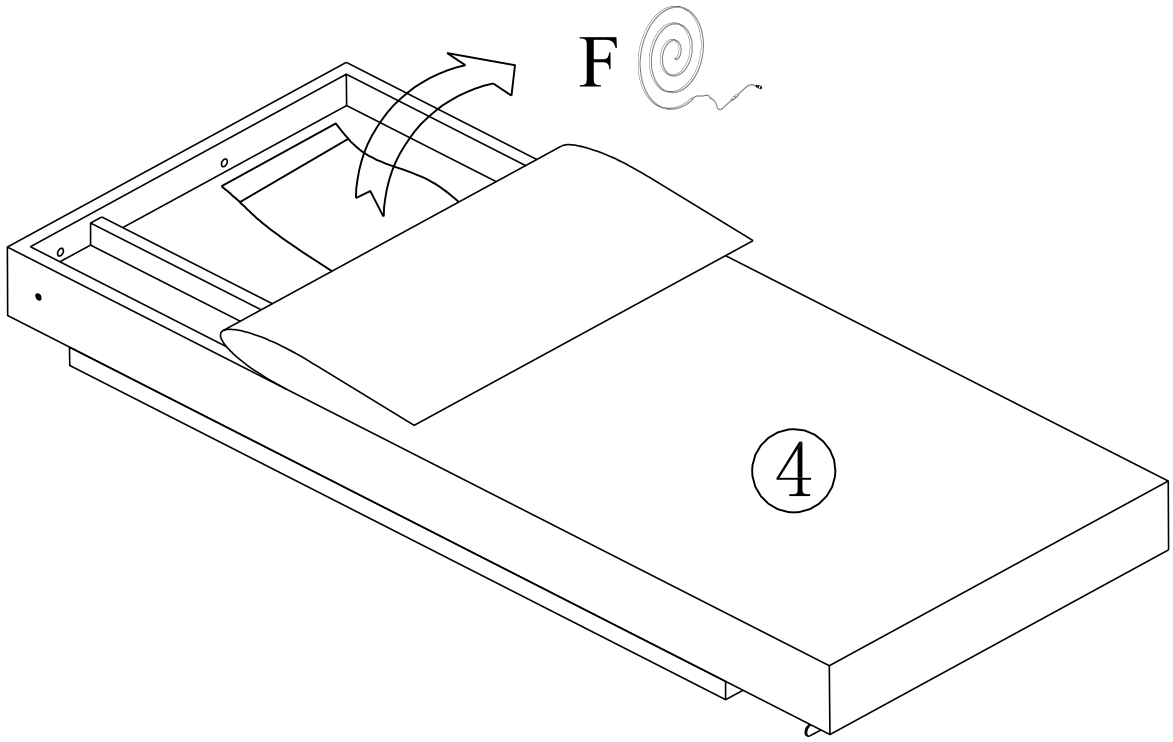

SSCHRITT 2

A	M8 x 25	x4
C		x4
J		

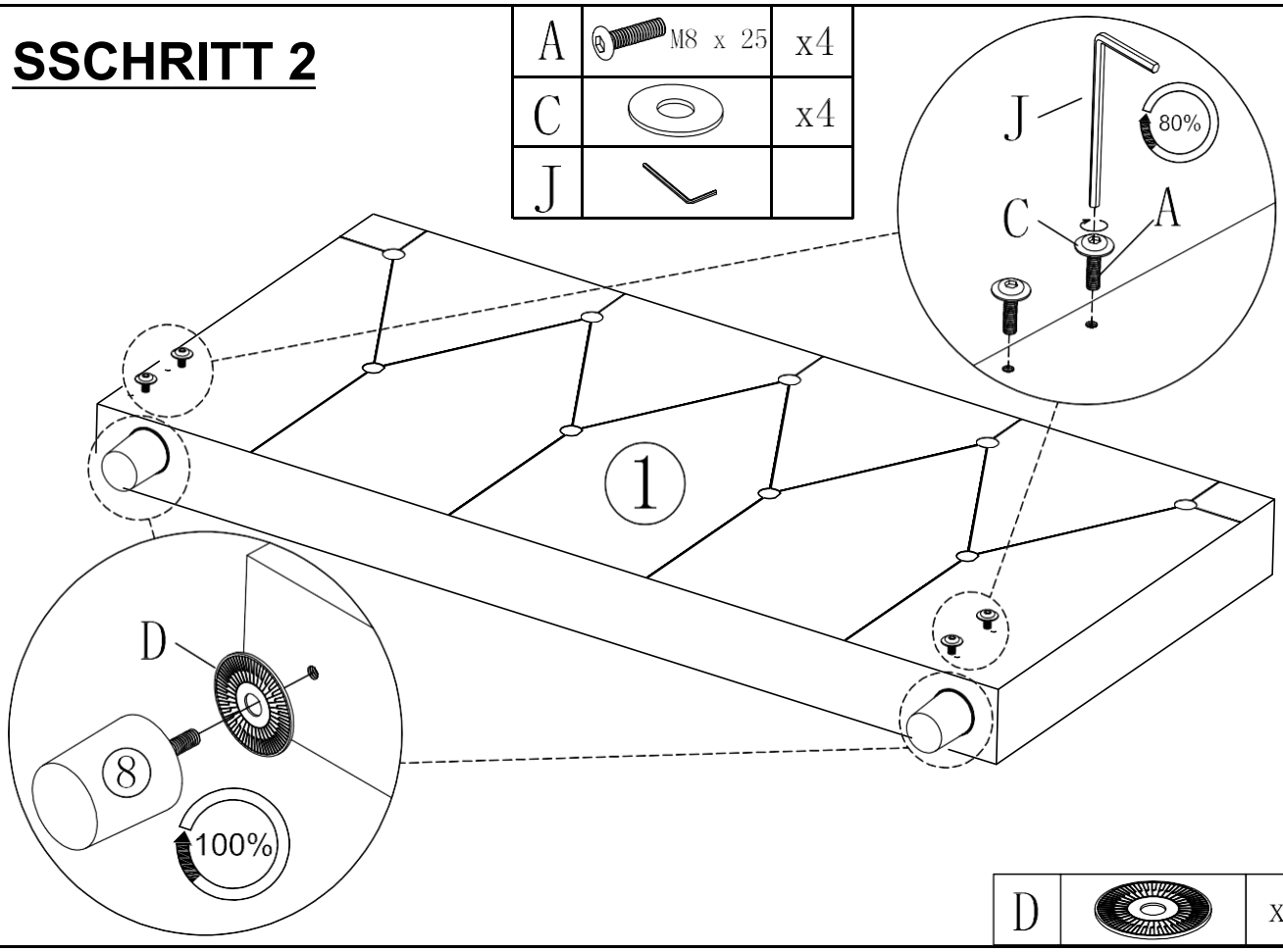

D		x2

INSTALLATION STEPS

SSCHRITT 3

A	M8 x 25	x4
C		x4
J		

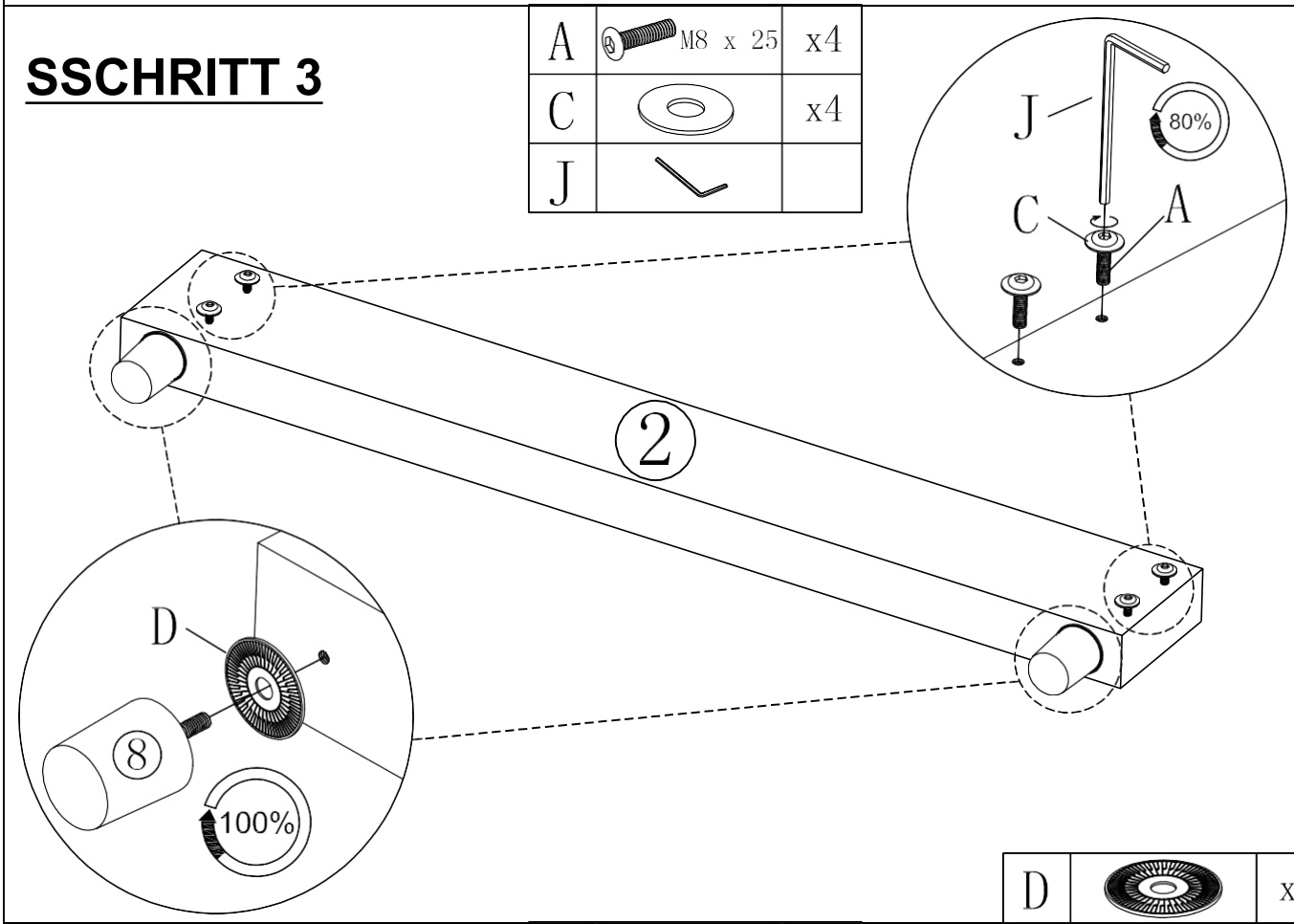

D		x2

SSCHRITT 4

B	M8 x 45	x2
C		x2
J		

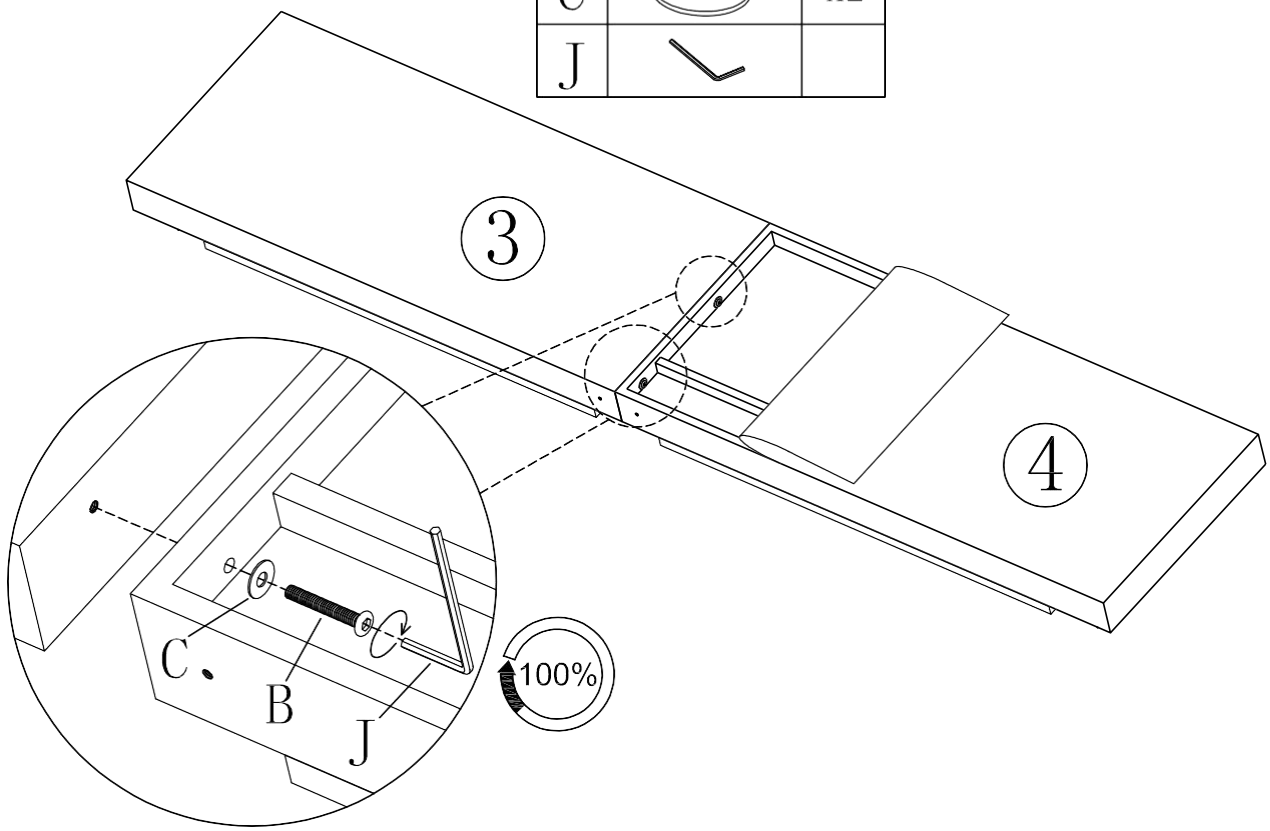

INSTALLATION STEPS

SSCHRITT 5

D		x2

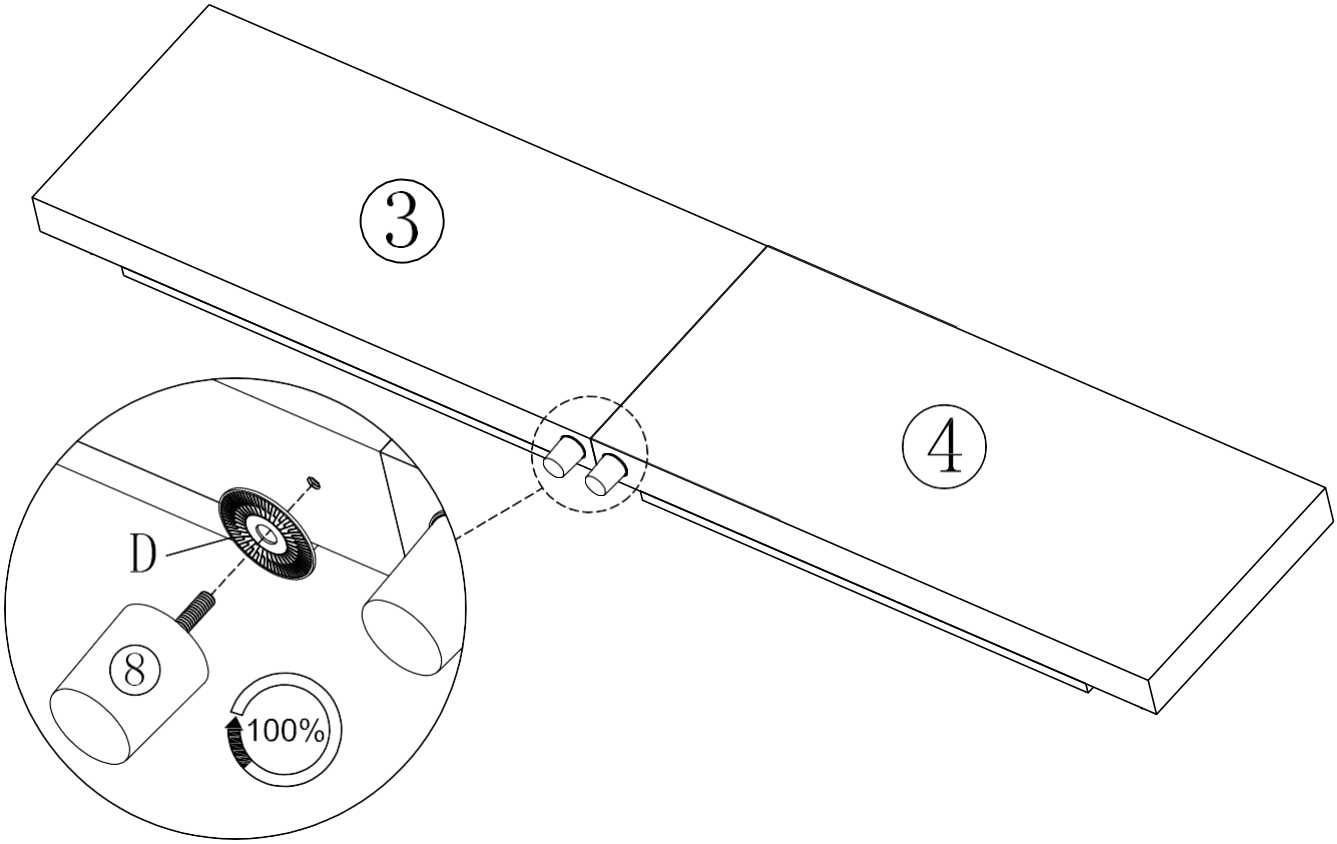

SSCHRITT 6

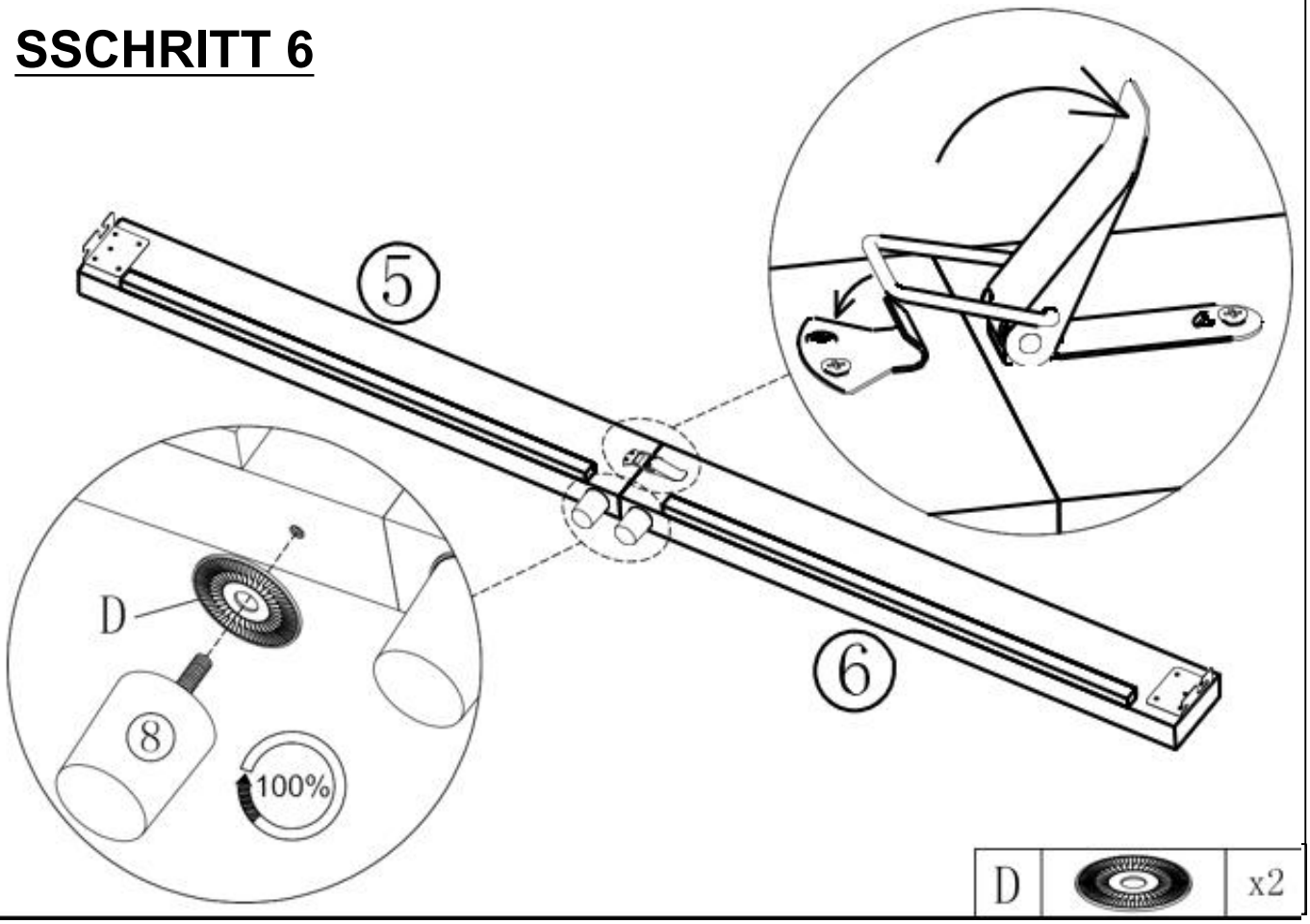

D		x2

INSTALLATION STEPS

SSCHRITT 7

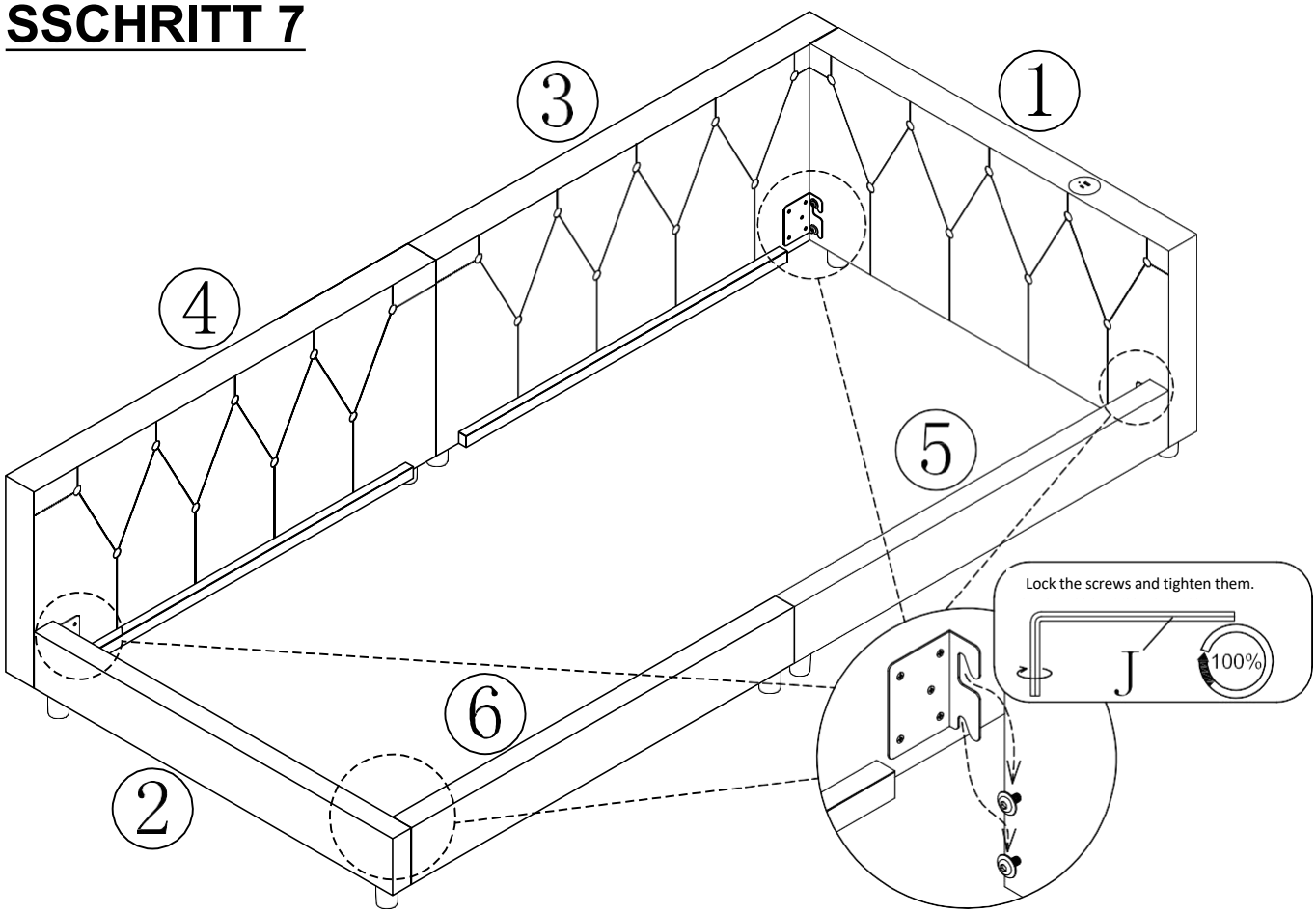

SSCHRITT 8

A	M8 x 25	x2
C		x2
E		x1
J		

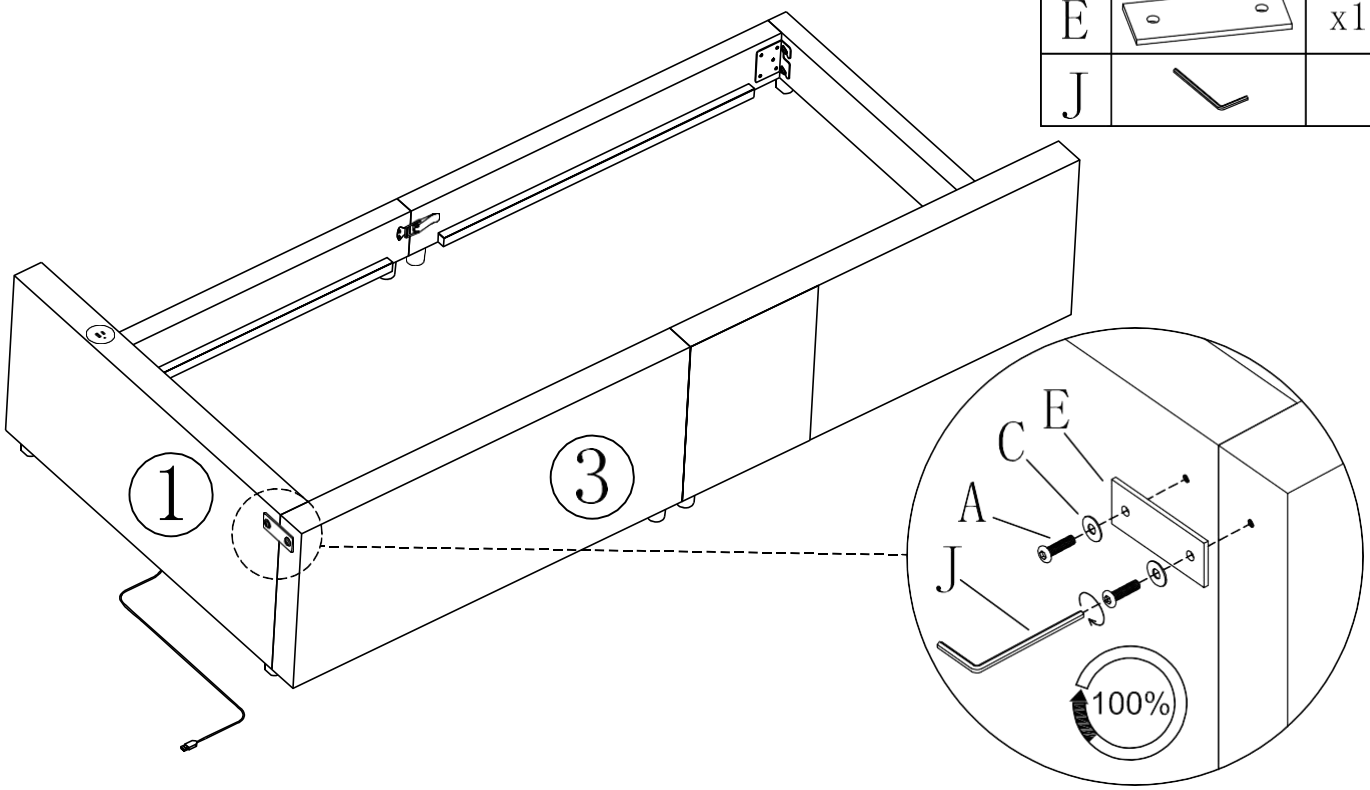

INSTALLATION STEPS

SSCHRITT 9

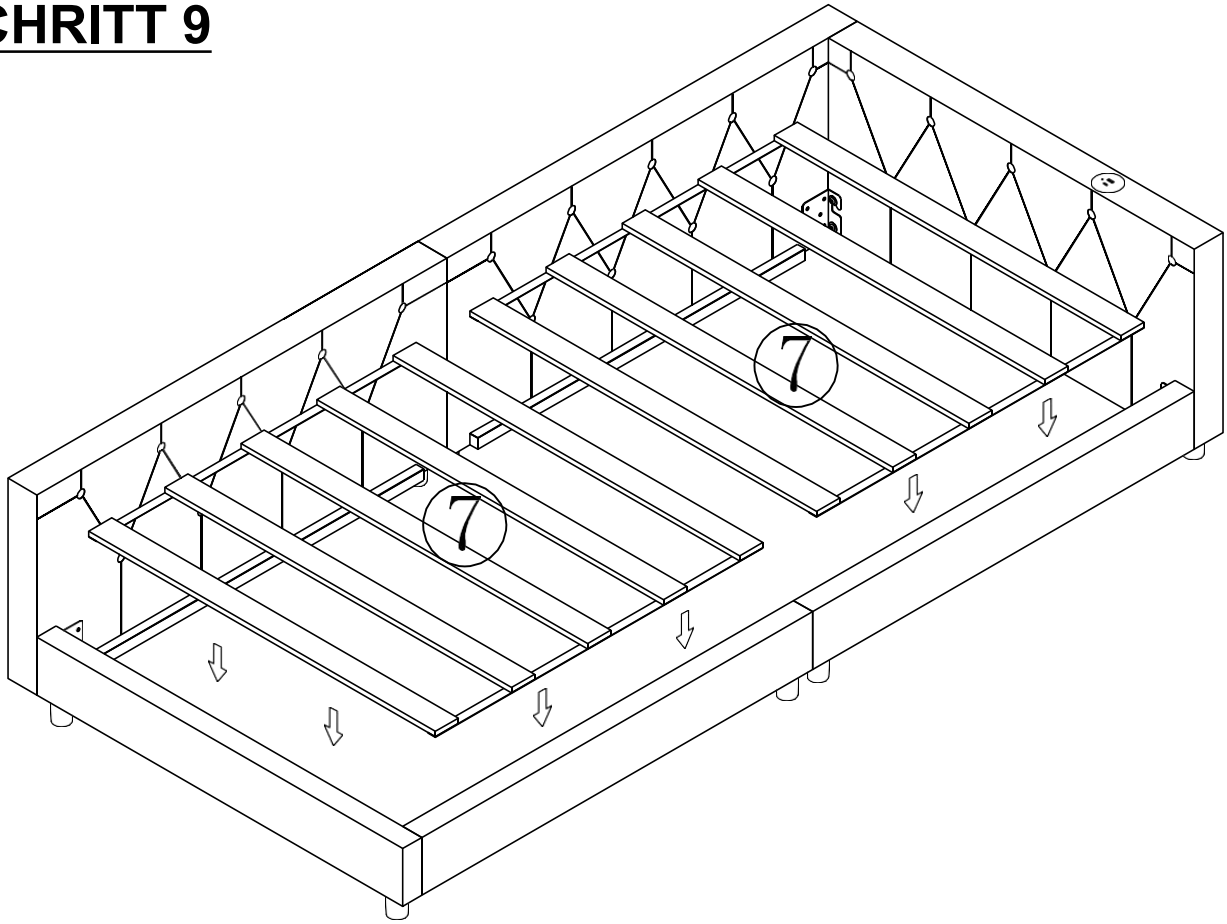

SSCHRITT 10

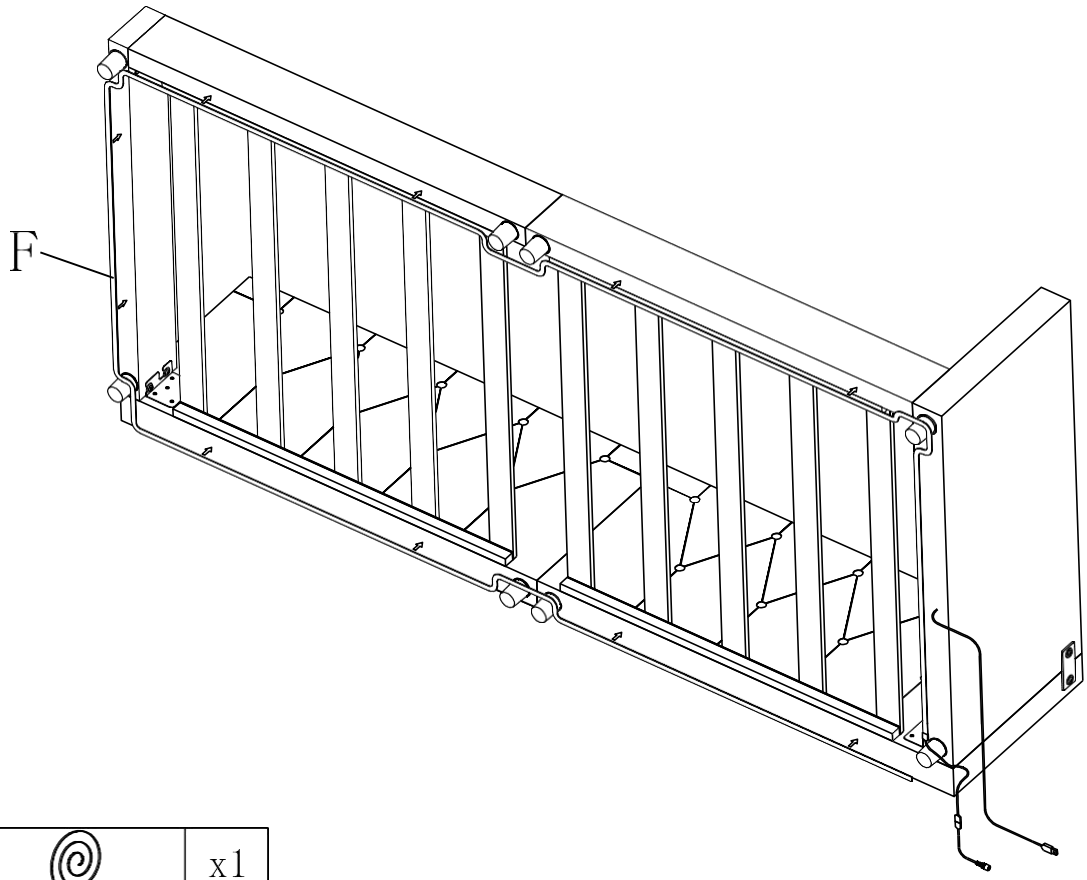

F		x1

INSTALLATION STEPS

SSCHRITT 11

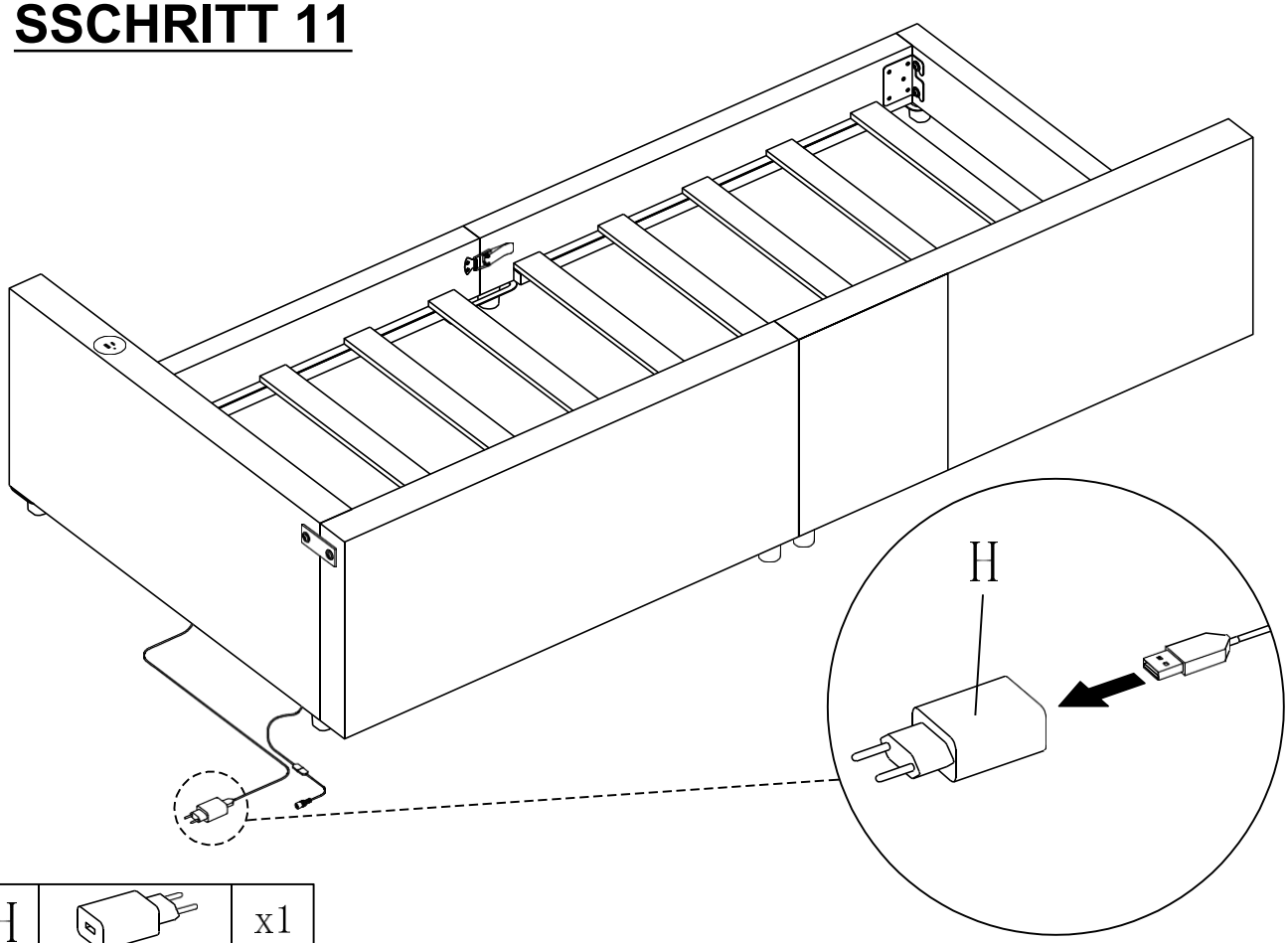

H		x1

SSCHRITT 12

G		x1

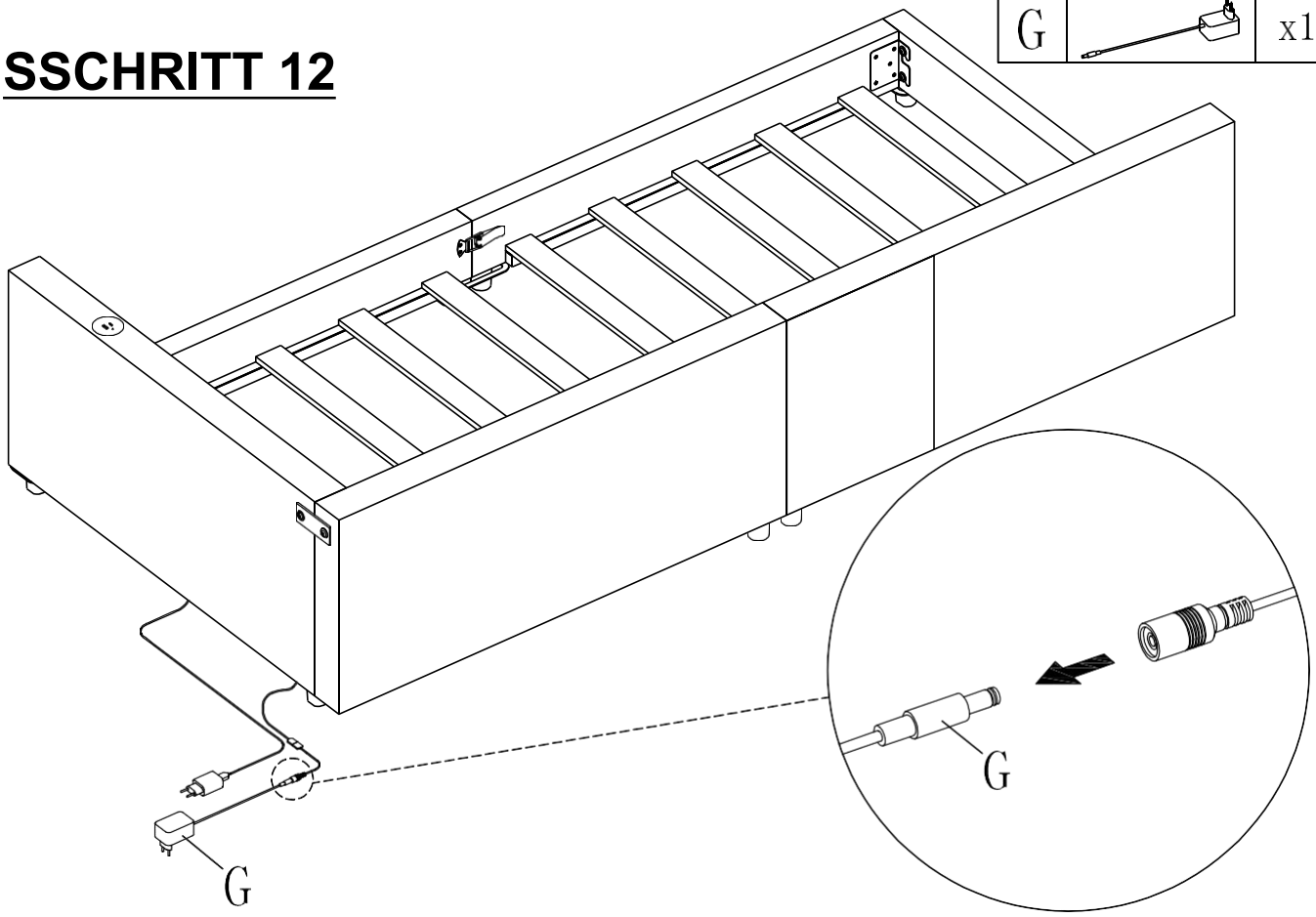

VOLLSTÄNDIG

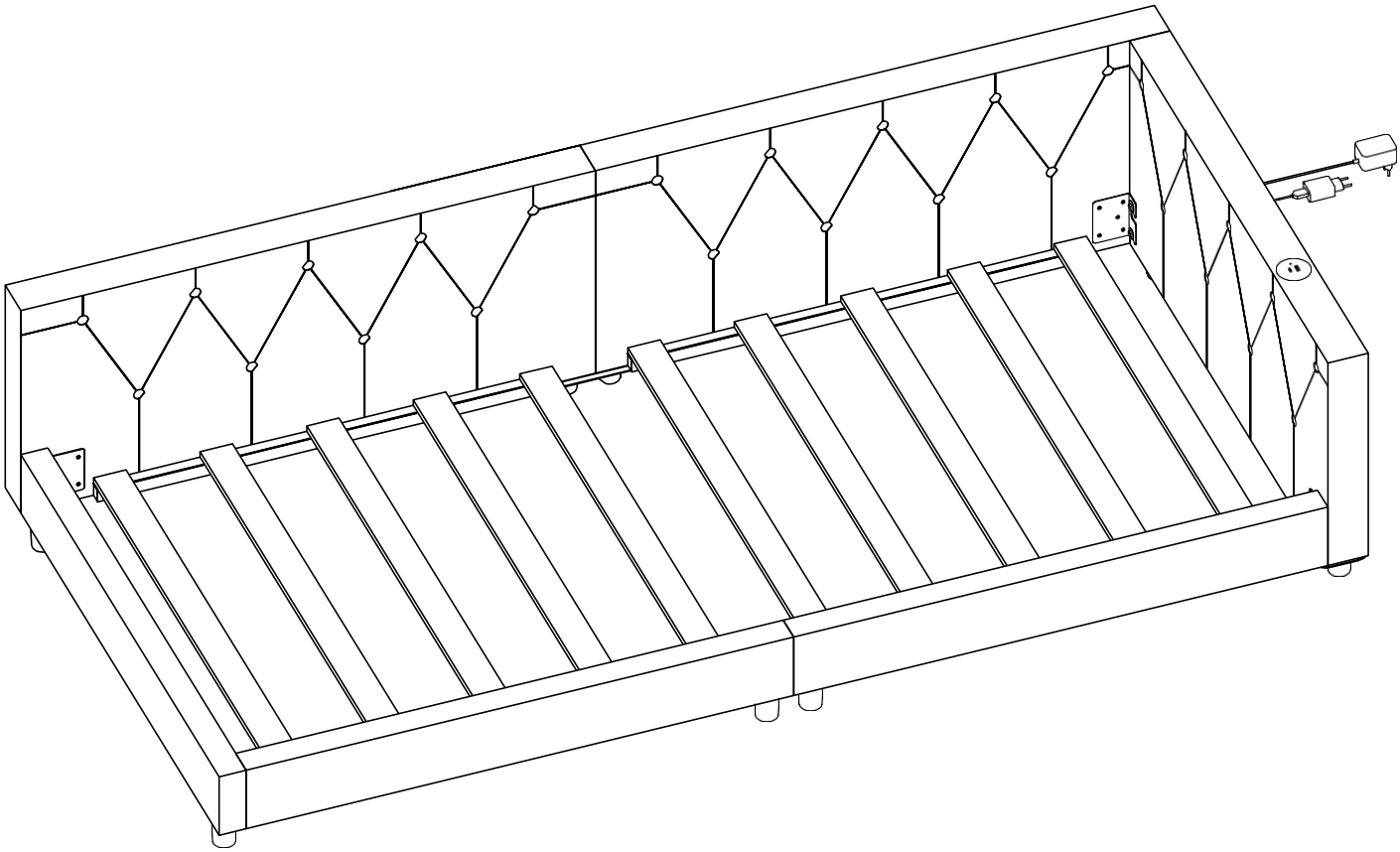

LotusLantern APP Manual

1. Software Overview

1.1 Overview

LotusLantern is a mobile APP to control LED strip by both IOS and Android phones.
The traditional control ways like infrared, 433MHz, 2.4GHz and others old wired ways will be replaced by mobile phone control way with convenient, powerful and scalable features.

Through this mobile APP，you can not only control the color, brightness and color temperature of the LED strips but also set up all kinds of fancy flash mode；Also this APP can change the light of the LED strip according to the rhythm of the music. This APP can set and control several LED strips through Bluetooth and the operation is very simple, easy to learn and easy to use.

1.2 Features

- Adjust color LED strips with 60,000 colors to change color and brightness and adjust monochrome LED strips to change brightness and color temperature
- Play music or turn on a sound playback device, you can let the light change the color and brightness with the rhythm of music, the music rhythm beautiful
- Inside multiple setting mode for color change and control LED strips without mobile
- Long distance control with omni-directional antenna, and many-to-many group control mode
- Once the connection is successful, connect automatically next time

1.3 Performance

LotusLantern APP is easy for use as well as great compatible with all kinds of smart phones; After the actual test of hundreds of mobile phones verification, the compatibility is above 95% of mobile phones in the market. APP is small and convenient, it consumes less system resources, so the requirements of the mobile configuration are low. Control delay is small, the operation feels good, light control is smooth with people's visual sense.

2. Operating Environment

This APP program requires phones of system above Andriod 4.3 and iOS 8.0. Mobile phone configuration is not limited.

3. Instructions

Note: Android version and iOS version download and use the same method, here in the Android version as an example.

3.1 APP Download

Scan the QR code

iOS and Android systems can download the "LotusLantern" APP by scanning the QR code. Open the browser or other tools with "Scan QR code" function, scan the "LotusLantern" QR code as below:

3.2 App Operation

(1) Click on the LotusLantern APP icon, enter the APP page:

(2) After entering the APP interface, if Bluetooth is not enabled, "an application wants to enable the Bluetooth function of this device." Click [Allow]

(3) switch to color and brightness interface:

(4) click to show the lamp list, view lamp list:

Bluetooth auto connect after search for devices

Lamp list

Status of device connection

Status of device connection

(5) Click to RGB manual adjustment view:

(6) switch to the mode interface:

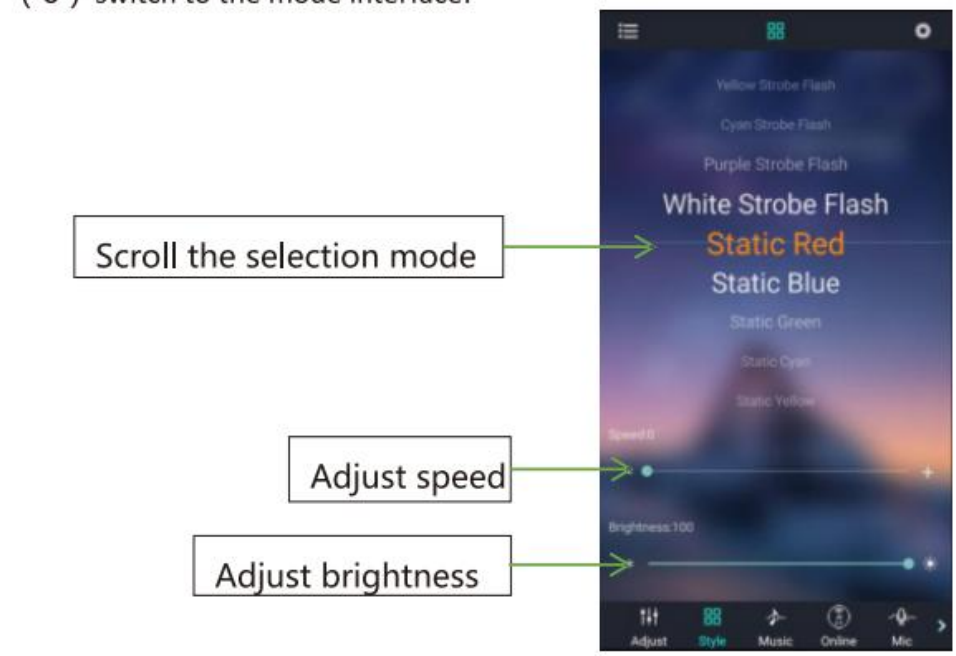

(7) switch to the music rhythm interface:

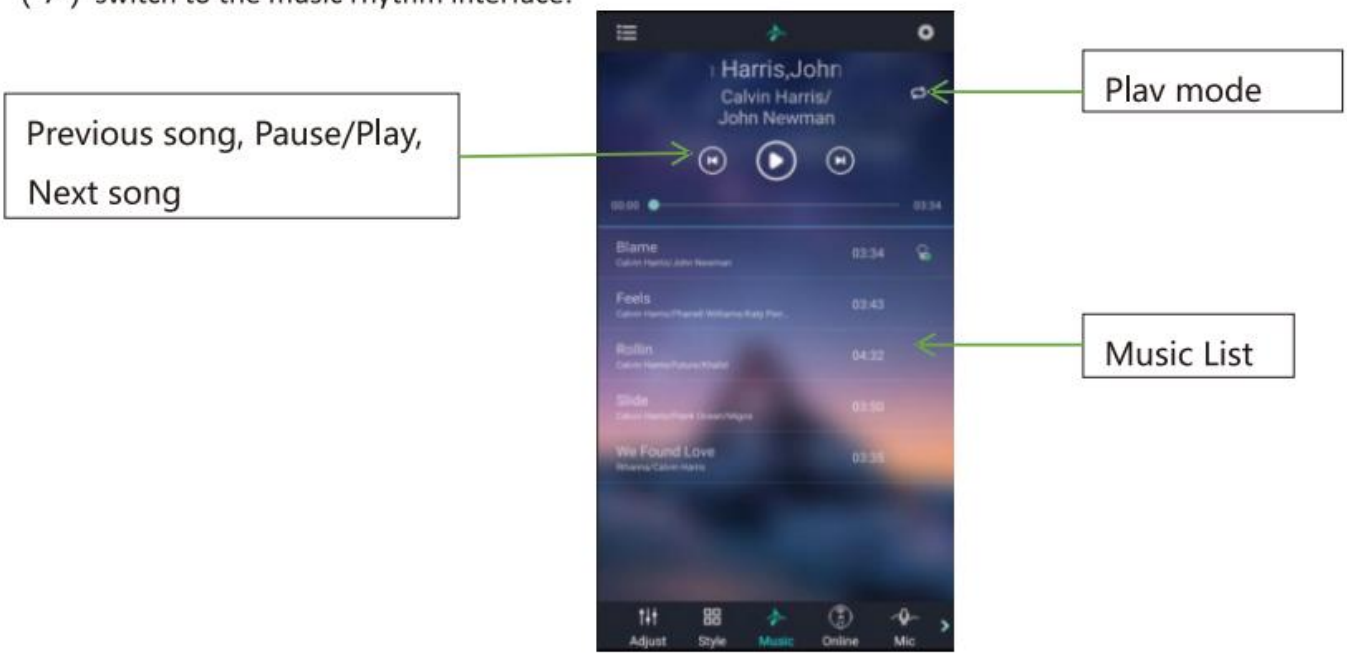

(8) Switch to the online music interface:

(9) Switch to the microphone rhythm interface:

Music rhythm through cell phone microphone

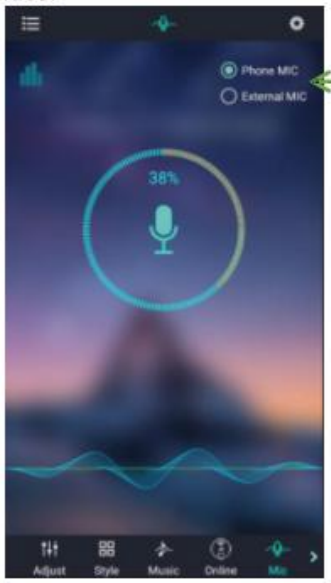

Switch phone microphone and external microphone

Music rhythm through the microphone on the product

Switch phone microphone and external microphone

4-style rhythm

Change the sensitivity of MIC to match the sound

(10) Switch to the schedule interface:

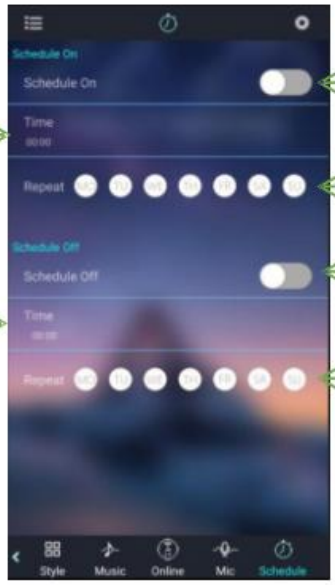

Set the time of Light-On

Set the time of Light-Off

Enable or disable the Light-On function

Repeat setting
No selection for once Light-On

Enable or disable the Light-Off function

Repeat setting
No selection for once Light-Off

(11) Switch to the modify pin sequence interface:

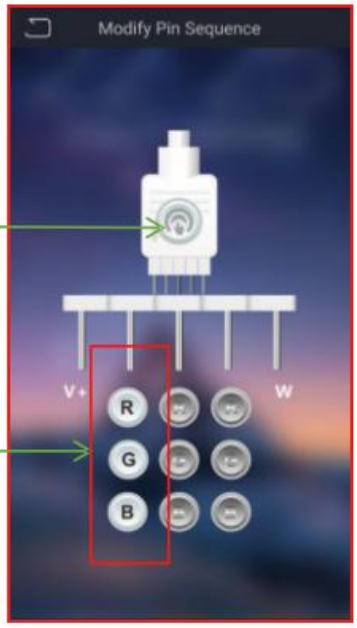

Click to save the new assignment

Change the real color of this line

Technical parameters:

Working temperature: -20-60°C (-4 F°-140 F°)
Power supply voltage: DC5-24V
Output: 3 Loops
Static power consumption: <0. 5W
Output current: <3A(each circuit)5V <30W 12V<108 24V<21 6W

Certificate – Сертификат – 證明書 – Certificat – 증명서

Certificate No. : HUAX240826002KC

huaxiang

Certificate of Conformity

Certificate's Holder	:	**Lufeng Jiazi Town Hongyu Furniture Accessories Factory**
Address	:	No. 20, Pengxing Nei Road, Lujia Avenue, Jiazi Town, Lufeng City, Guangdong Province
Manufacturer	:	**Lufeng Jiazi Town Hongyu Furniture Accessories Factory**
Address	:	No. 20, Pengxing Nei Road, Lujia Avenue, Jiazi Town, Lufeng City, Guangdong Province
Product Name	:	**Sofa USB**
Product Model (S)	:	HY-1012
Trade Mark	:	N/A
Related Standard(s)	:	**EN 55032: 2015 + A1: 2020** **EN 55035: 2017 + A1: 2020**
Report No.	:	**HUAX240826002KR**

The EUT described above has been tested by us with the listed standards and found in compliance with the council EMC Directive 2014/30/EU. It is possible to use CE marking to demonstrate the compliance with this EMC Directive

CE

Aug. 28, 2024

Certification Manager

Shenzhen Huaxiang Testing Co., Ltd. IMPARTIAL * Approved *

Shenzhen Huaxiang Testing Co., Ltd
201, Building A10, Fuhai Information Port, Xinhe Community, Fuhai Street, Bao'an District, Shenzhen City, Guangdong Province, China Web.:Http:// www.hua-x.com
E-mail: huaxiang@hua-x.com Tel.:+86-0755-23010432

CERTIFICATE OF CONFORMITY

Certificate No.: KEYS23101138001LD-01

Applicant	:	**Shenzhen Jiecheng Technology Co., Ltd**
Address	:	**South side of 4th floor, Building B, Sanmin Industrial Park, Shuitian Community, Shiyan Street, Bao'an District, Shenzhen**
Manufacturer	:	**Shenzhen Jiecheng Technology Co., Ltd**
Address	:	**South side of 4th floor, Building B, Sanmin Industrial Park, Shuitian Community, Shiyan Street, Bao'an District, Shenzhen**
Trade mark	:	**N/A**
Product	:	**LED light strip**
Power Rating	:	**AC100-240V,50/60Hz.19W**
Model No.	:	**5050-12V-60D-QC5 (Additional models see model list)**

The submitted sample of the above equipment has been tested and found to comply with the following European Directive:

Low Voltage Directive - 2014/35/EU

The standard(s) used for showing compliance with the essential requirements:

Applicable Standard(s) **EN IEC 60598-1:2021+A11:2022**
EN 60598-2-20:2015
EN 62493:2015+A1:2022
EN 62471: 2008

This certificate is part of the full test report(s) and should be read in conjunction with the test report:KEYS23101138001LD-01.

This certificate is based on an evaluation of one sample of above mentioned product. It does not imply assessment of the production of the product. Without the written approval of Guangdong KEYS Testing Technology Co., Ltd., this certificate is not permitted to be reproduced, except in full. It is not permitted to use the test lab's logo. The CE marking may only be used if all the relevant and effective European Directives are applicable.

Jason Zhan.

Guangdong KEYS Testing Technology Co., Ltd.

Jason Zhan
Manager
Date: October 19, 2023

Guangdong KEYS Testing Technology Co., Ltd.
6 / f, Building B, Chuangyigu Industrial Park, No.5 Hehe Street, Songxi Road, Hengkeng, Liaobu, Dongguan City
Tel:+ 86-0769-89798319
http://www.keys-lab.com E-mail: info@keys-lab.com

Dongguan Jun'an Testing & Certification Co., Ltd.

Room 303, Building 1, No.316, Renzhou Road,
Shatian, Dongguan, Guangdong, China
www.junantest.com TEL:0769-81710286

CERTIFICATE OF CONFORMITY

No: JAT24062002111EC-1

Applicant	:	Shantou Jinshiyuan Electric Appliance Co., Ltd.
Address	:	Jiafen Building ,Hualan Building 3rd Street, Ximeizhu Village, Simapu Town, Chaonan District, Shantou City
Manufacturer	:	Shantou Jinshiyuan Electric Appliance Co., Ltd.
Address	:	Jiafen Building ,Hualan Building 3rd Street, Ximeizhu Village, Simapu Town, Chaonan District, Shantou City
EUT	:	AC/DC ADAPTER
Trade Mark	:	N/A
M/N	:	JSY-1230、JSY-1225、JSY-1220、JSY-0930、JSY-0920、JSY-2410、JSY-2415

The submitted sample of the above equipment has been tested and found to comply with the following European Directive:

Electromagnetic Compatibility Directive 2014/30/EU

The standard(s) used for showing compliance with the essential requirements:

Applicable Standard(s)	Test Report(s) Number
EN IEC 55015:2019+A11:2020 **EN IEC 61547:2023** **EN IEC 61000-3-2:2019+A2:2024** **EN 61000-3-3:2013+A2:2021+AC:2022-01**	**JAT24062002111ER-1**

This certificate is part of the full test report(s) and should be read in conjunction with it. This certificate is based on an evaluation of one sample of above mentioned product. It does not imply assessment of the production of the product. Without the written approval of Dongguan Jun'an Testing & Certification Co., Ltd., this certificate is not permitted to be reproduced, except in full. It is not permitted to use the test lab's logo. The CE marking may only be used if all the relevant and effective European Directive are applicable.

CE

Dongguan Jun'an Testing & Certification Co., Ltd. APPROVED

(Manager)

June 18, 2024

Labtest
The Quality Assured Expert

Certificate NO.: LBTC230314130R

Certificate of Compliance

EU- Restriction of the use of certain hazardous substances (RoHS) -

Report No.	:	LBTR230314130R
Applicant	:	**Shengdi（Jieyang）Electronic Technology Co.， Ltd.**
Address	:	Middle Section of Zhenghe Road,Paotai, Rongcheng District, Guangdong,China
Manufacturer	:	**Shengdi（Jieyang）Electronic Technology Co.， Ltd.**
Address	:	Middle Section of Zhenghe Road,Paotai, Rongcheng District, Guangdong,China
Product	:	Power Adapter
Model No.	:	CT-11,CTC-11,CCT-11,CTF-11,CTR-11,CT-21,CTC-21,CTR-21.
Trade Mark	:	**N/A**

Test Standards	IEC 62321-3-1:2013
	IEC 62321-5:2013
	IEC 62321-4:2013+AMD1:2017
	IEC 62321-7-1:2015
	IEC 62321-7-2:2017
	IEC 62321-6:2015

The test results based on the above specified products comply with the EU RoHS 2 Directive 2011/65 / EU Appendix II Amendment Directive (EU) 2015/863 as last amended by Directive (EU) 2017/2102 limit requirements.
The test results apply only to the particular sample tested and to the specific tests carried out. Specifically to the sample investigated in our test reference number only.
Other relevant Directives have to be observed.

RoHS
Overall Validation Report

Chief Manager

Date of Issue: Mar. 14, 2023

This statement is based on a single evaluation of the sample(s) of above mentioned product. It does not imply an assessment of the whole production.

SHENZHEN LABTEST TECHNOLOGY LABORATORY LTD.
901-12, Block 1, No.9 Jinxiu Middle Road, Laokeng Community, Longtian Street, Pingshan District, Shenzhen, Guangdong, China. www.clabtest.com