SELAH

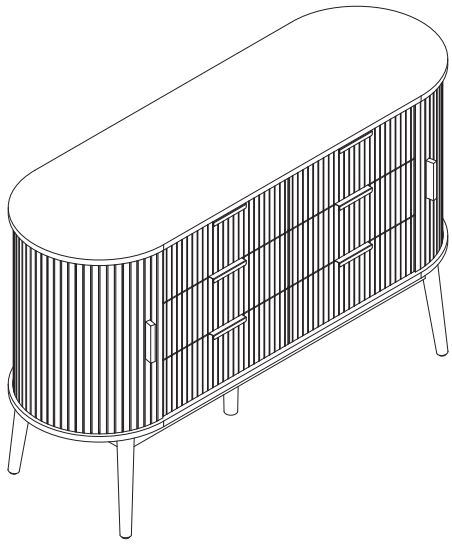

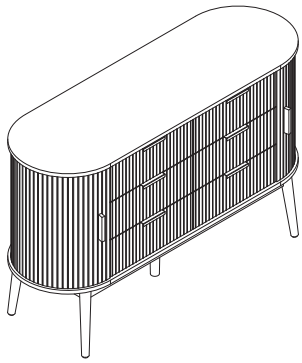

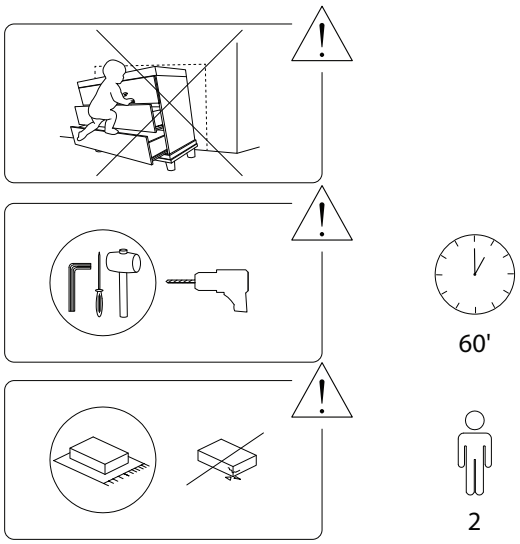
60'
2

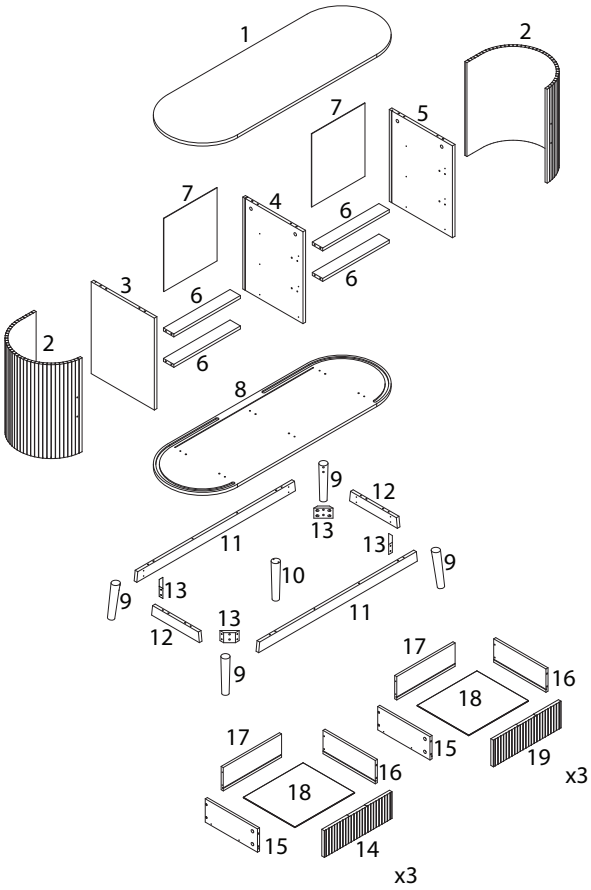
1
2
7
5
7
4
6
3
6
6
2
6
8
9
12
13
11
13
10
9
9
13
13
12
11
9
17
16
18
17
15
19
x3
16
18
15
14
x3

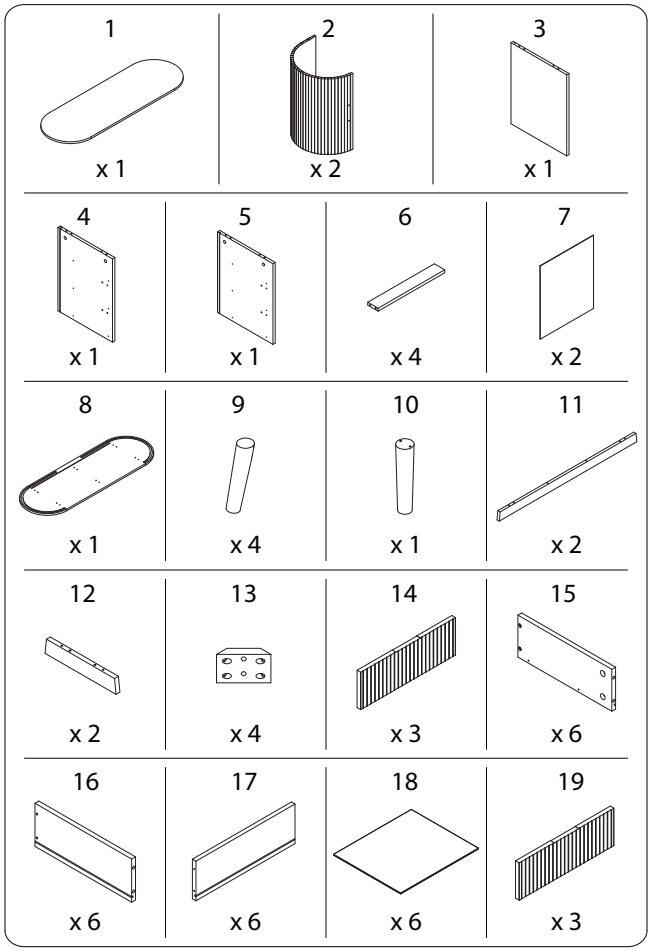
1
x 1
2
x 2
3
x 1
4
x 1
5
x 1
6
x 4
7
x 2
8
x 1
9
x 4
10
x 1
11
x 2
12
x 2
13
x 4
14
x 3
15
x 6
16
x 6
17
x 6
18
x 6
19
x 3

A x 38	B x 38	C x 30
D M4 x 25 x 20	E M4 x 40 x 6	F M4 x 55 x 12
G M6 x 55 x 8	H x 8	I x 12
J M3 x 14 x 12	K x 2	L x 4
M M4 x 12 x 6	N M4 x 35 x 2	O x 2

P x 2	Q x 1	R M3 x 12 x 62
S x 6	T x 1	
U x 1	V M4 x 30 x 26	
C_L x 6	C_R x 6	
D_L x 6	D_R x 6	

1

3 x 1	4 x 1	5 x 1	R M3 x 12 x 24	C_L x 6	C_R x 6

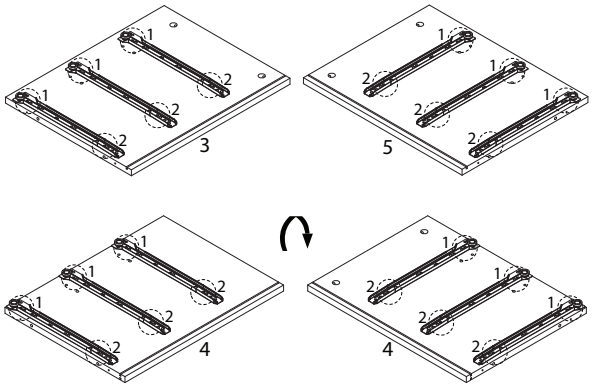

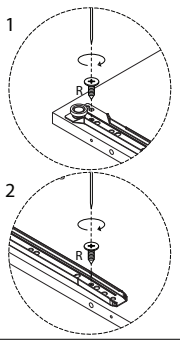

2

A x 8	C x 8

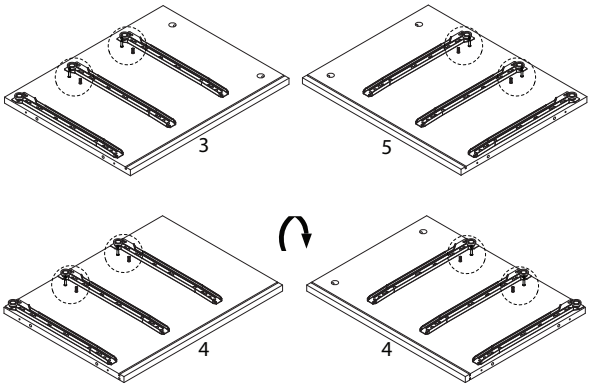

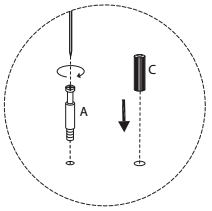

3

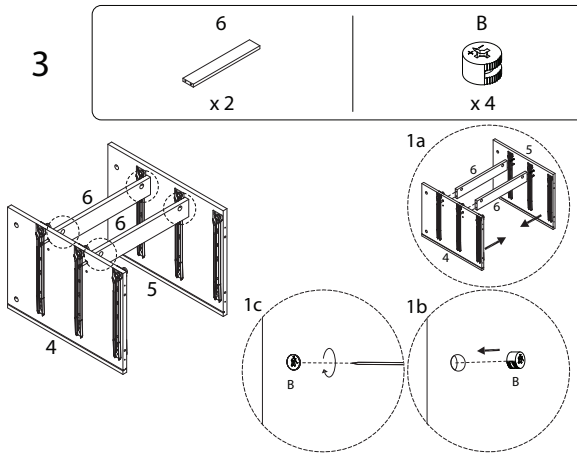

4

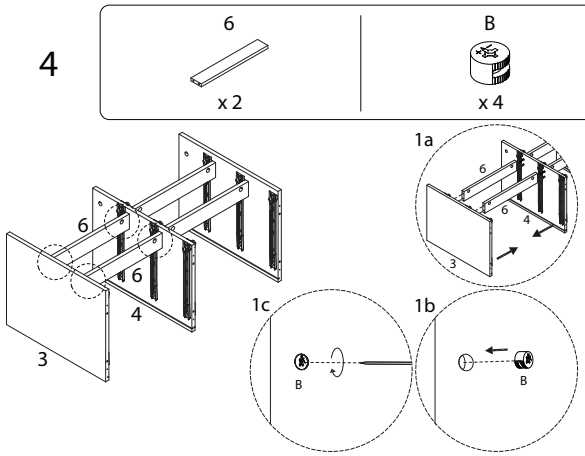

5

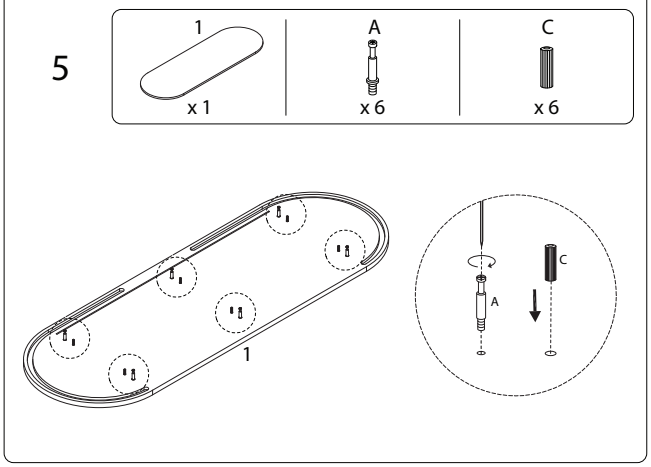

6

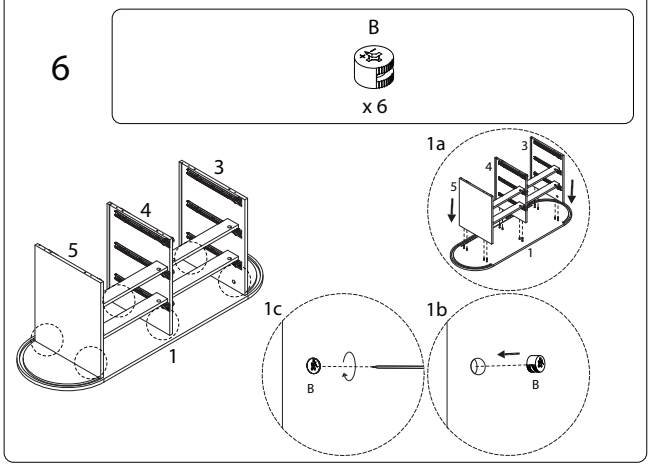

7

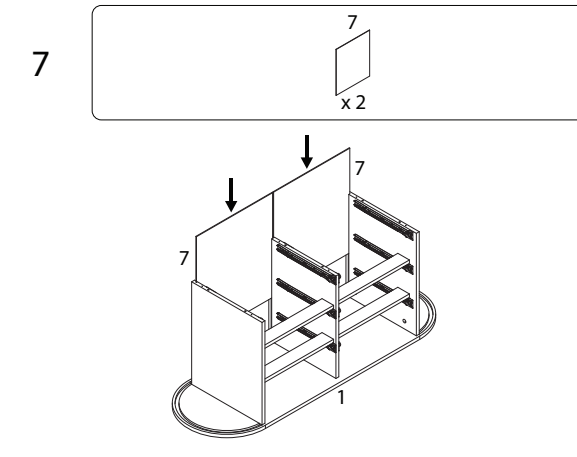

9

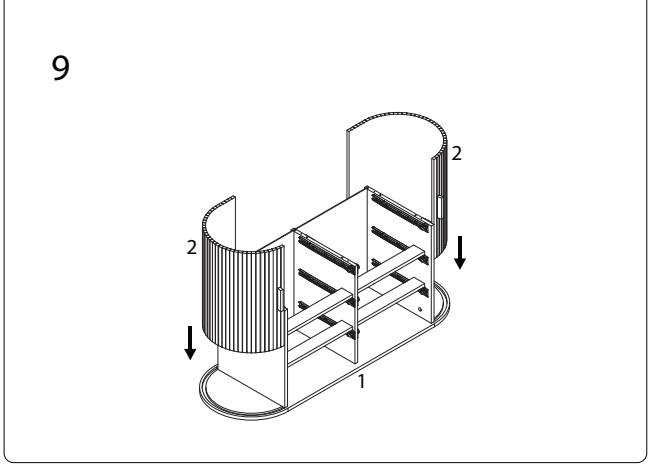

8 x 2

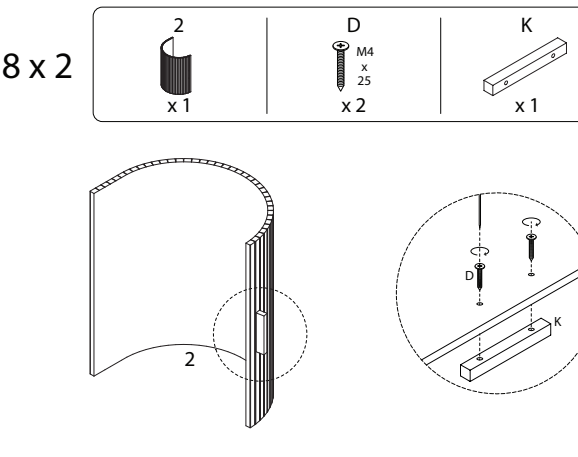

10

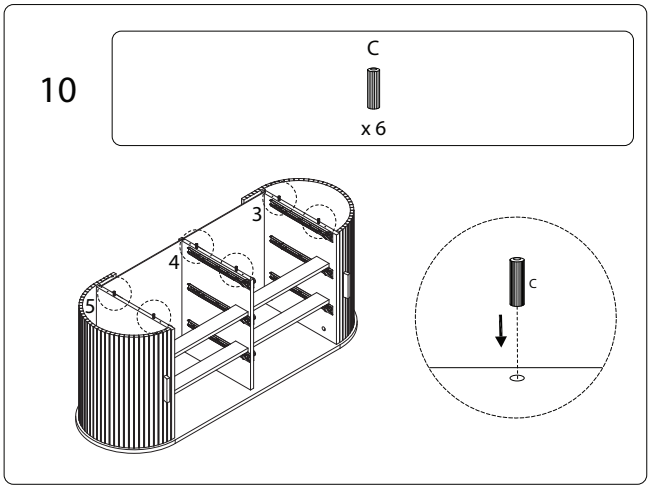

11

8	E
x 1	M4 x 40 x 6

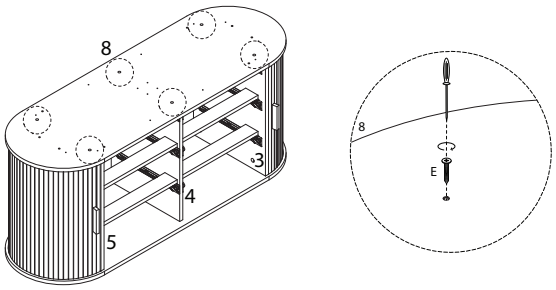

12

11	12	13	D
x 2	x 2	x 4	M4 x 25 x 16

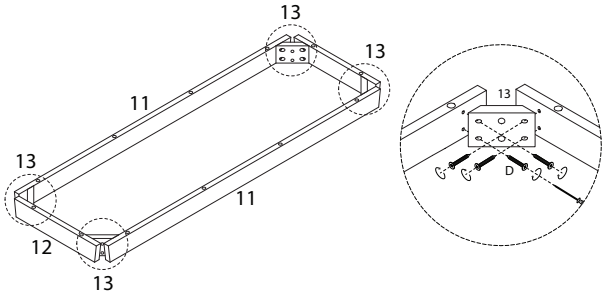

13

C
x 8

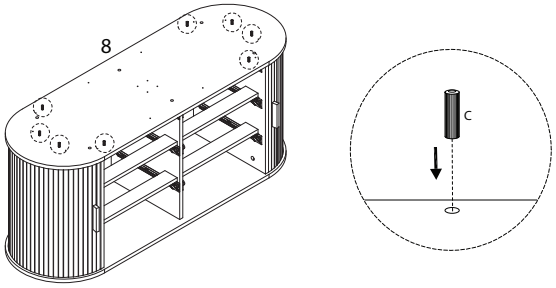

14

F
M4 x 55 x 12

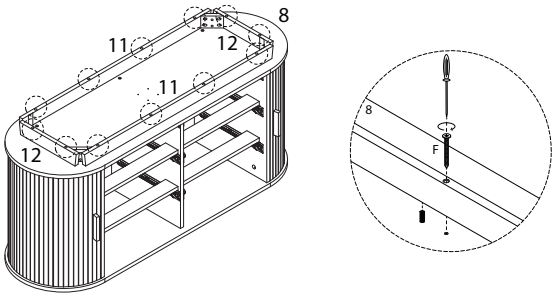

15

10	U	V
x 1	x 1	M4 x 30 x 2

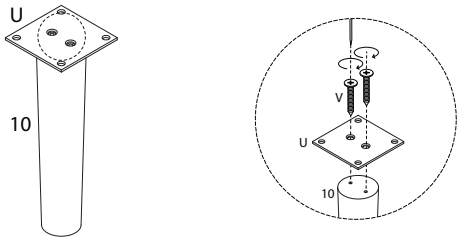

16

9	G	H	M	Q
x 4	M6 x 55 x 8	x 8	M4 x 12 x 4	x 1

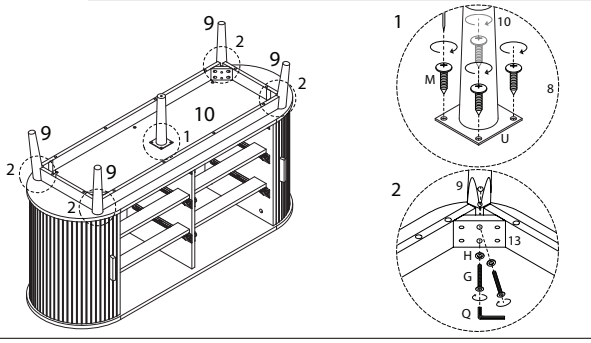

17

L	T
x 4	x 1

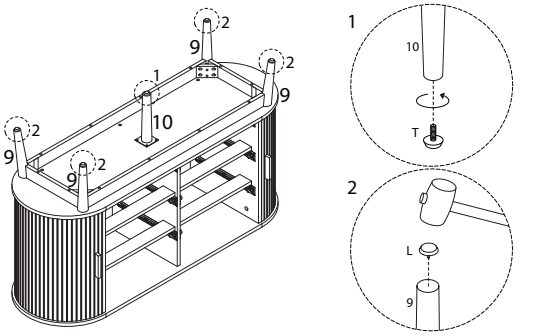

18

I	J
x 12	M3 x 14 x 12

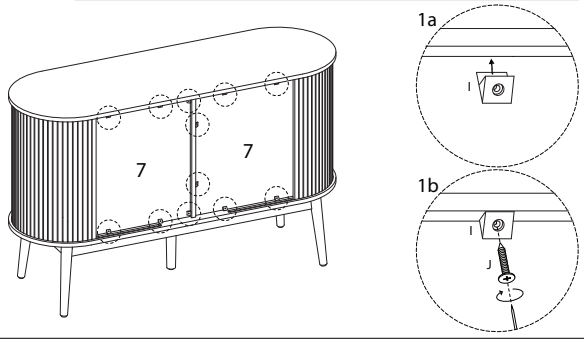

19

M	O
M4 x 12	
x 2	x 2

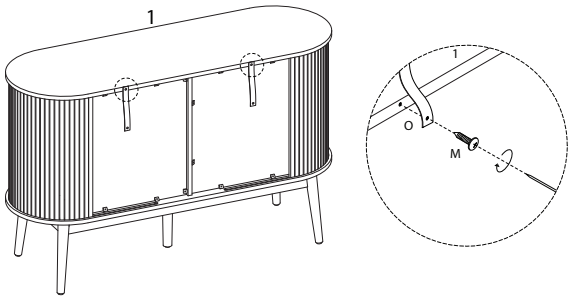

20 x 3

14	19	A
x 1	x 1	x 8

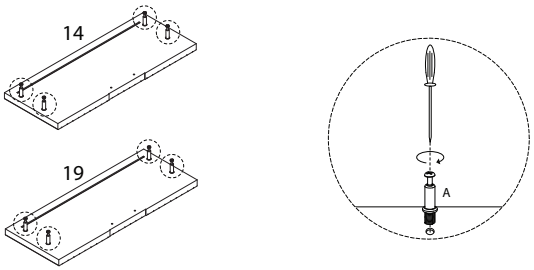

21 x 3

15	16	B
x 2	x 2	x 8

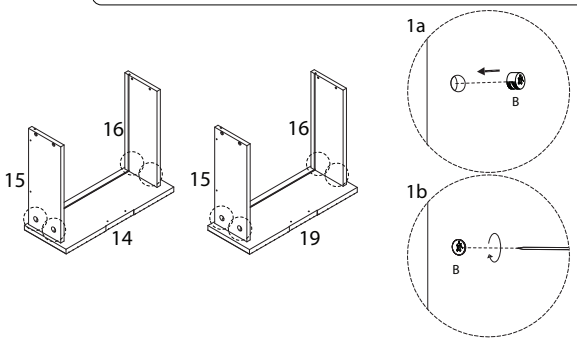

22 x 3

18
x 2

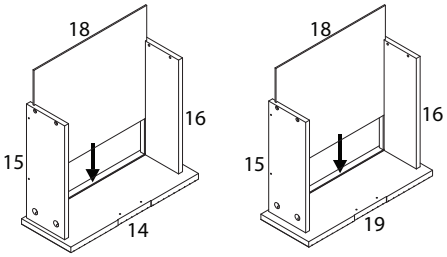

23 x 3

17	V
x 2	M4 x 30 x 8

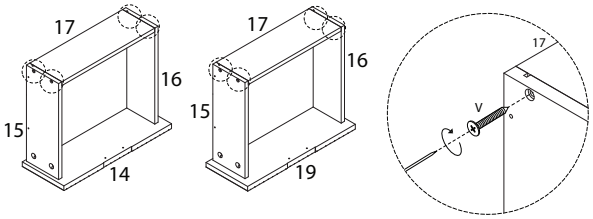

24 x 3

D_L	D_R	R
x 2	x 2	M3 x 12 x 8

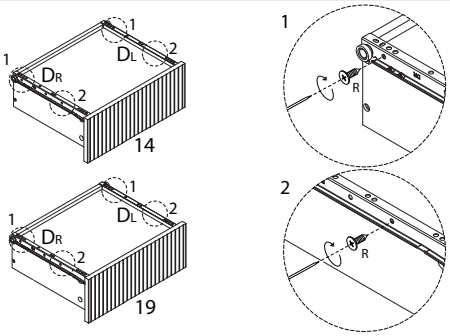

25 x 3

R	S
M3 x 12	
x 4	x 2

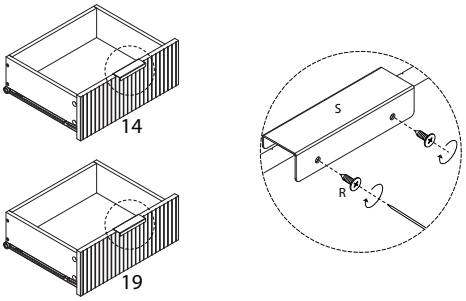

26

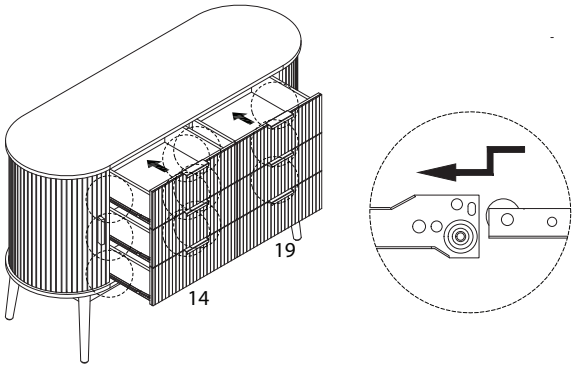

27

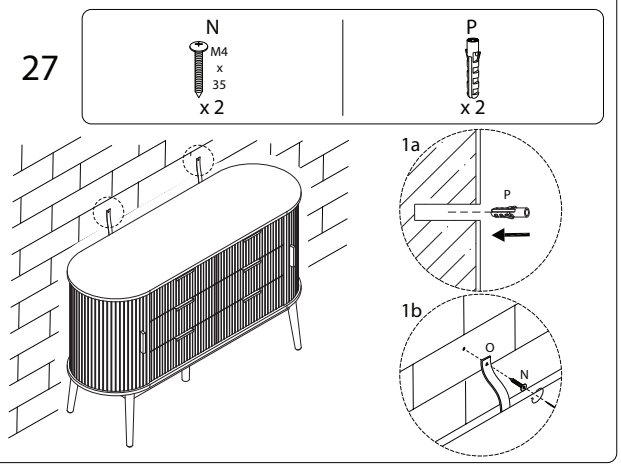

688/SELAH/300824/