LEXTON

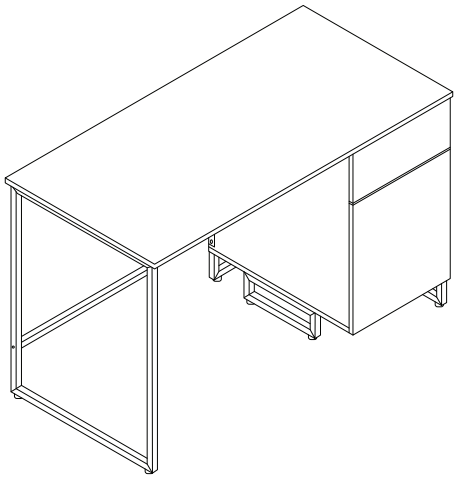

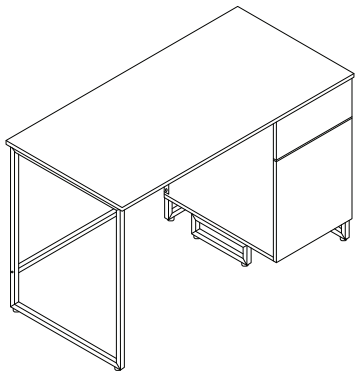

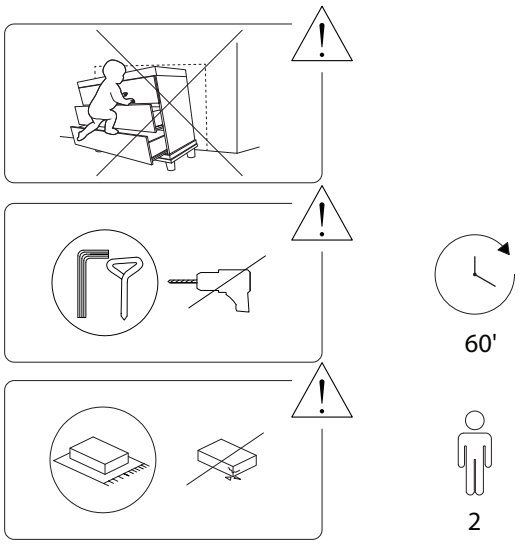
60'
2

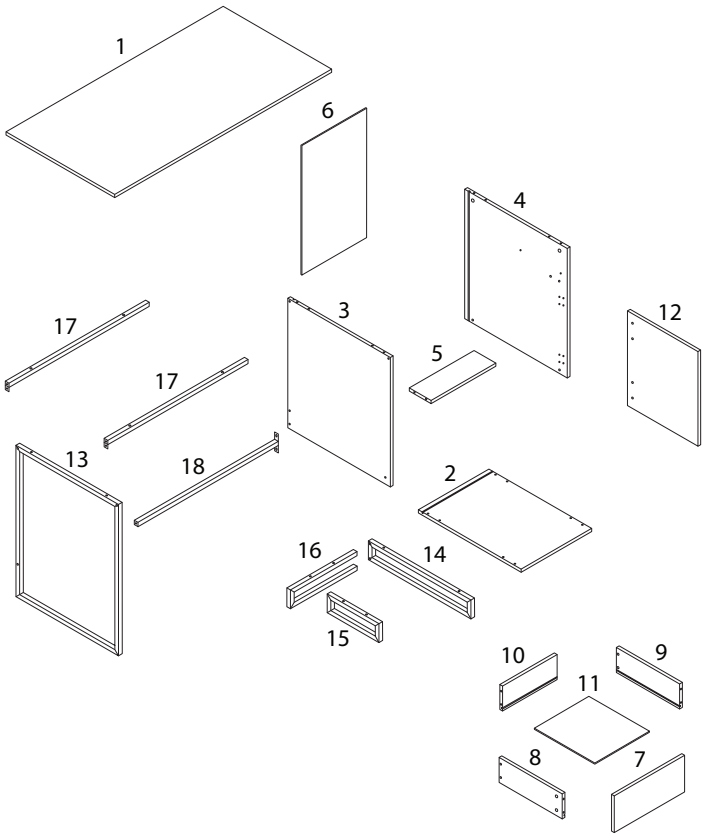
1
6
4
17
3
12
5
17
13
18
2
16
14
15
10
9
11
8
7

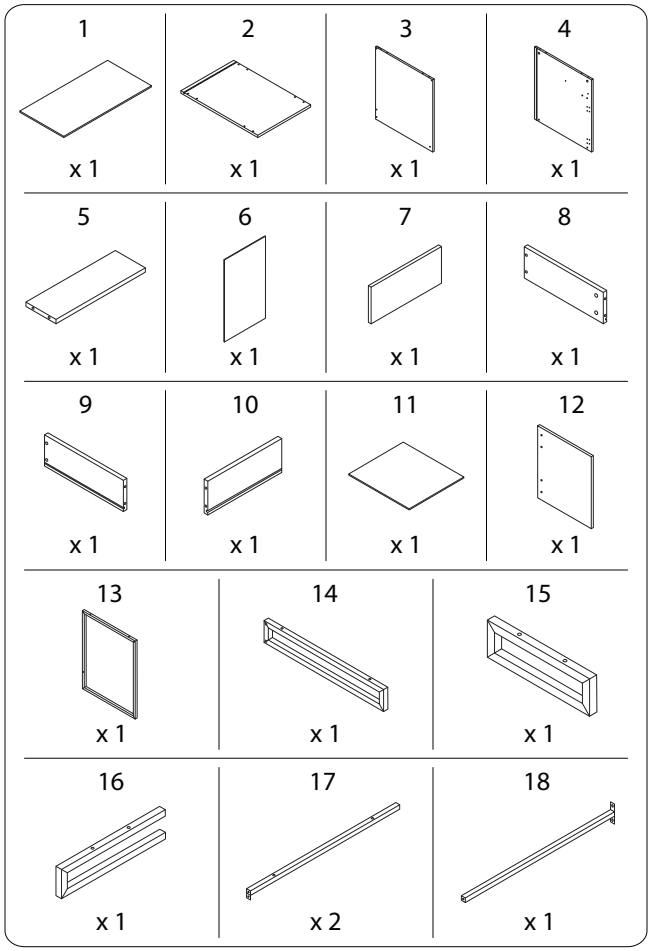
1
x 1
2
x 1
3
x 1
4
x 1
5
x 1
6
x 1
7
x 1
8
x 1
9
x 1
10
x 1
11
x 1
12
x 1
13
x 1
14
x 1
15
x 1
16
x 1
17
x 2
18
x 1

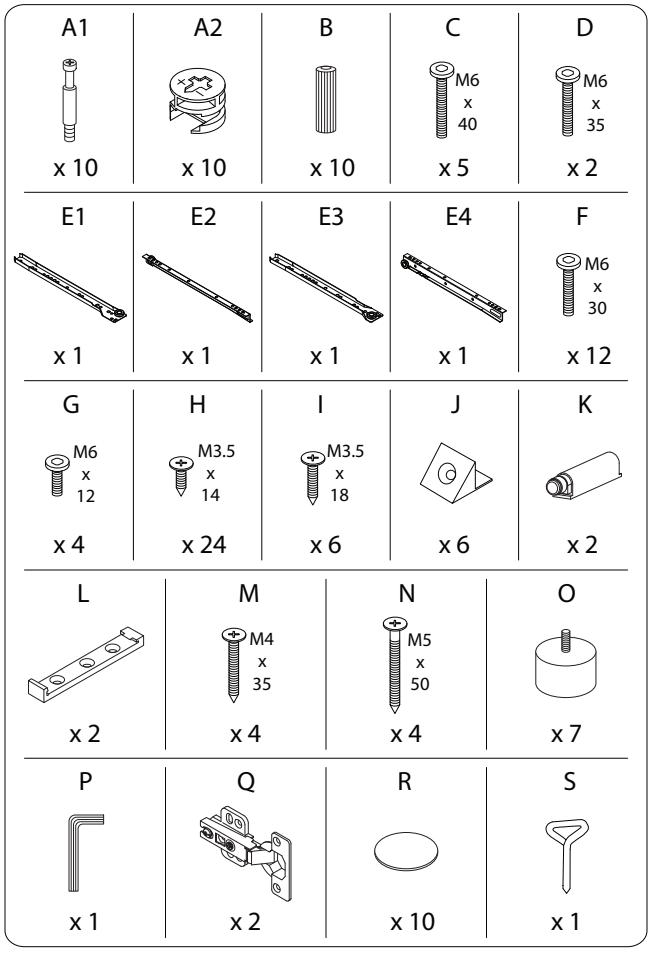
A1 x 10
A2 x 10
B x 10
C M6 x 40 x 5
D M6 x 35 x 2
E1 x 1
E2 x 1
E3 x 1
E4 x 1
F M6 x 30 x 12
G M6 x 12 x 4
H M3.5 x 14 x 24
I M3.5 x 18 x 6
J x 6
K x 2
L x 2
M M4 x 35 x 4
N M5 x 50 x 4
O x 7
P x 1
Q x 2
R x 10
S x 1

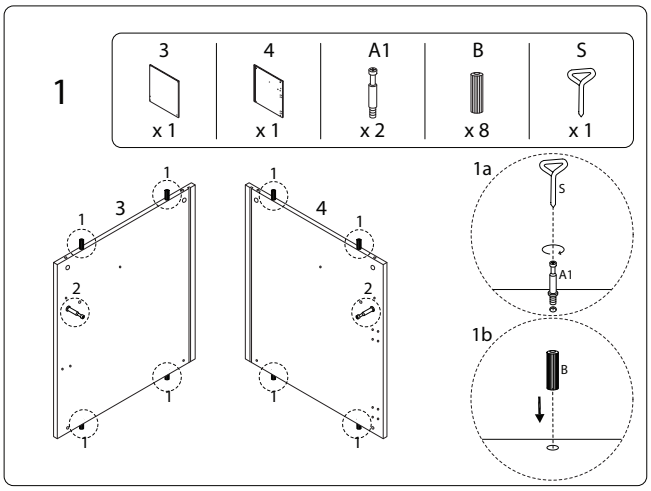
1
3 x 1
4 x 1
A1 x 2
B x 8
S x 1
1a
1b

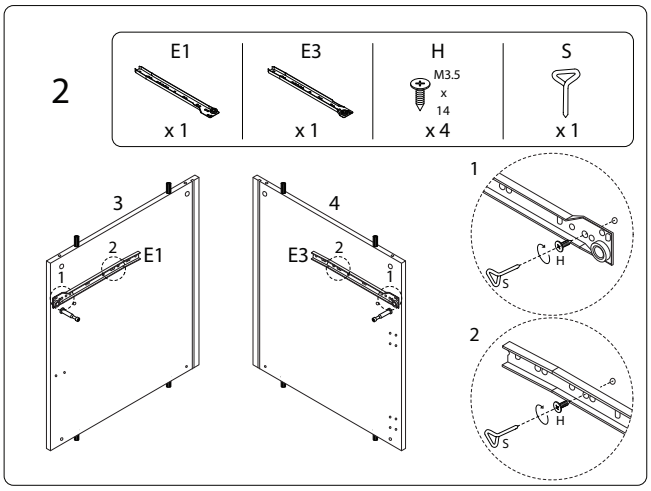
2
E1 x 1
E3 x 1
H M3.5 x 14 x 4
S x 1

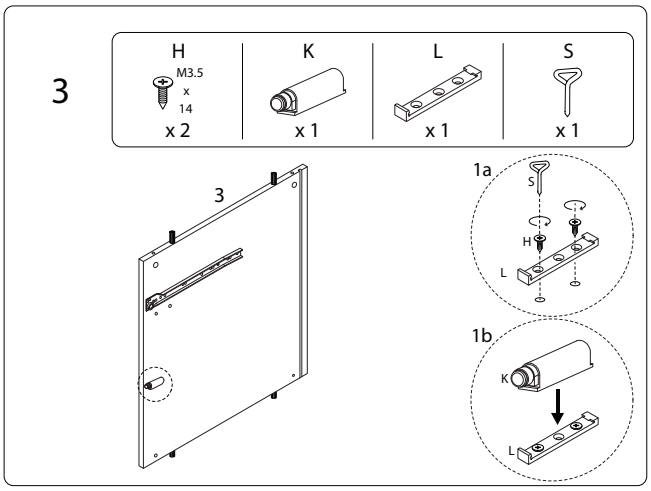
3
H M3.5 x 14 x 2
K x 1
L x 1
S x 1
1a
1b

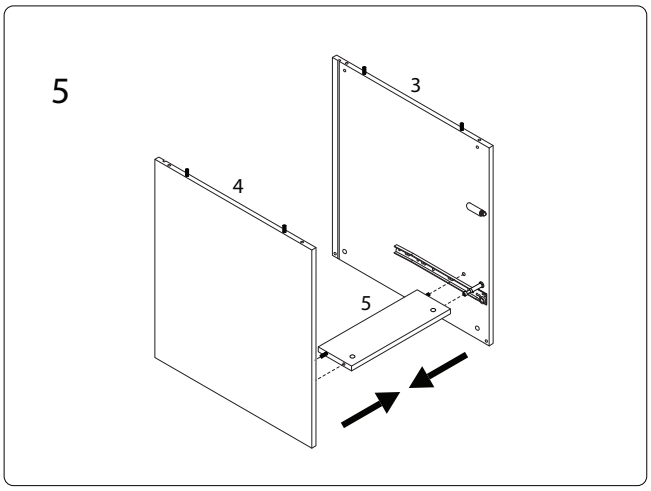
5

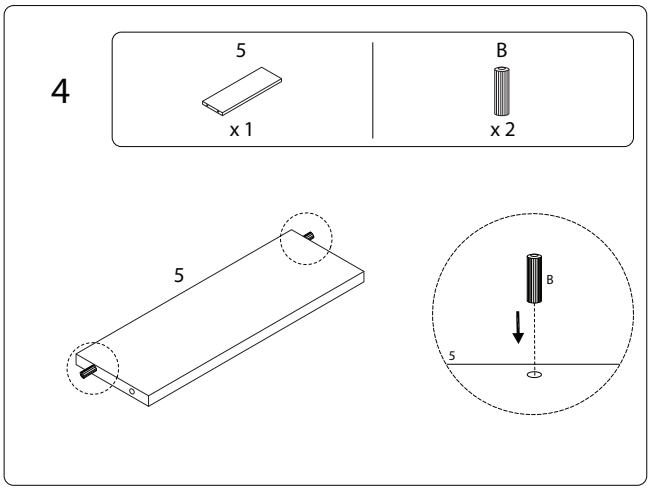
4
5 x 1
B x 2

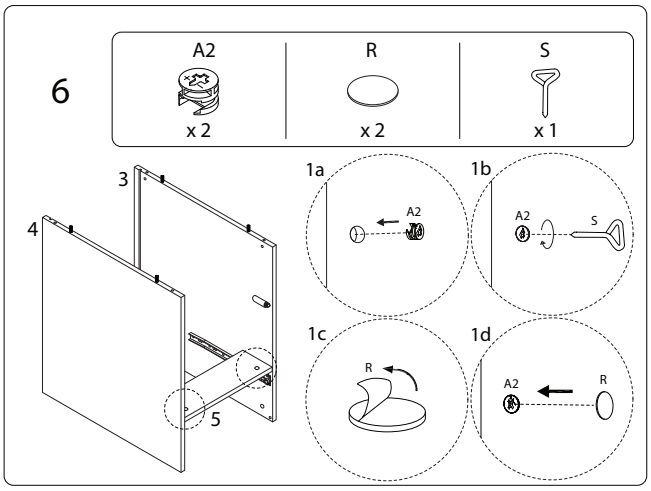
6
A2 x 2
R x 2
S x 1
1a
1b
1c
1d

7

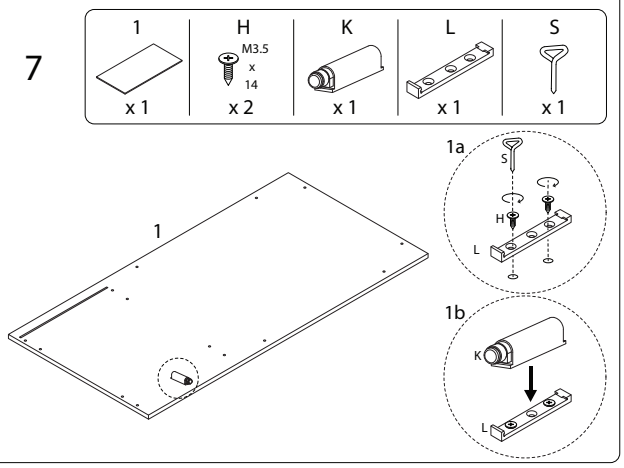

8

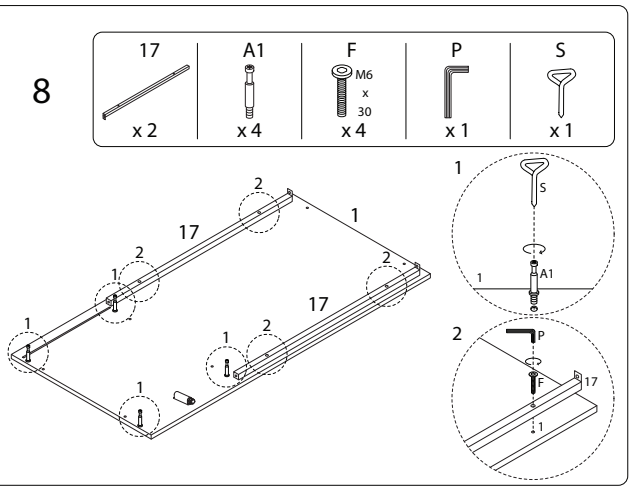

9

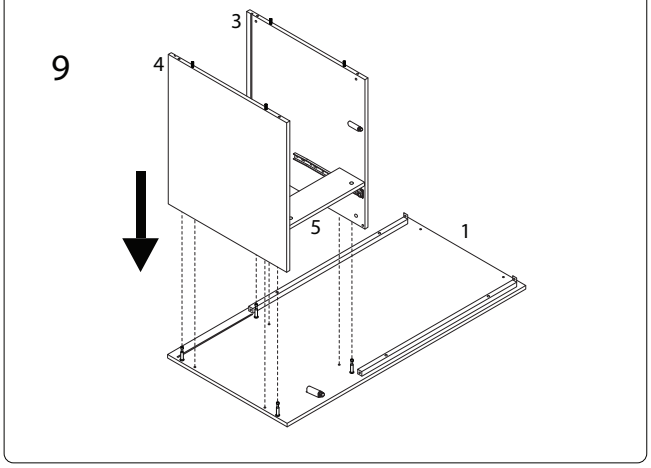

10

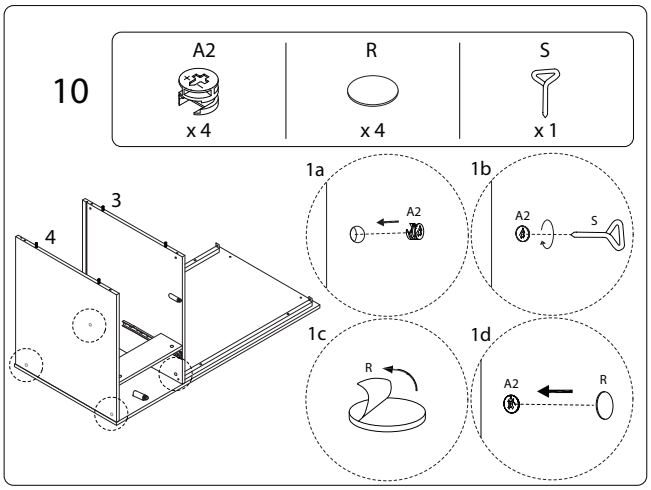

11

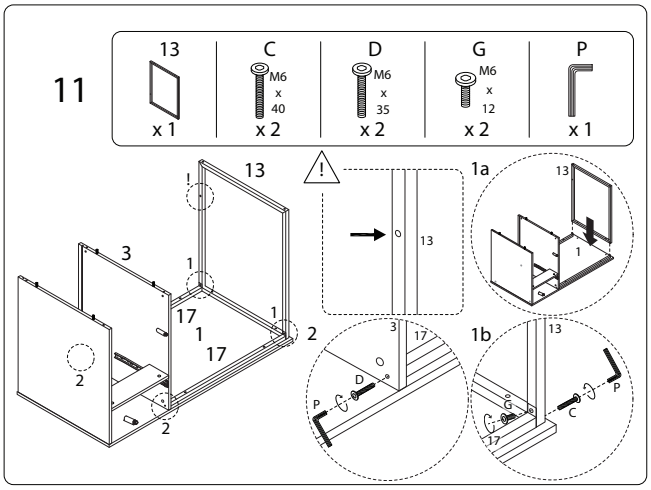

12

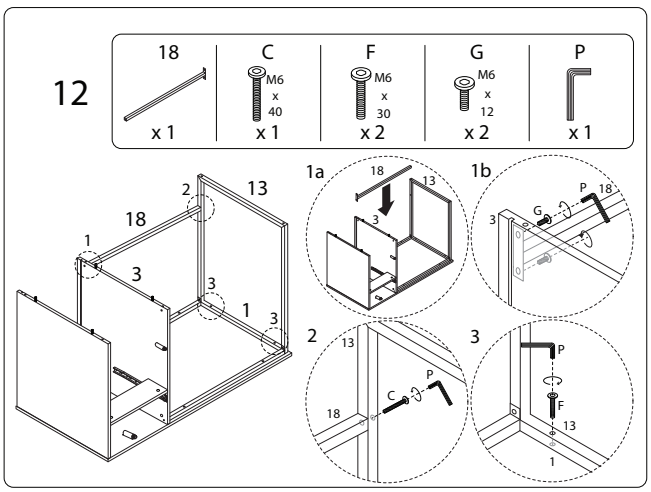

13

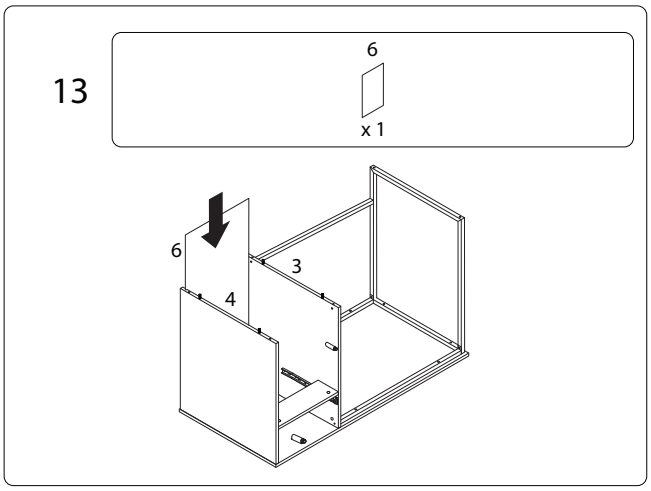

14

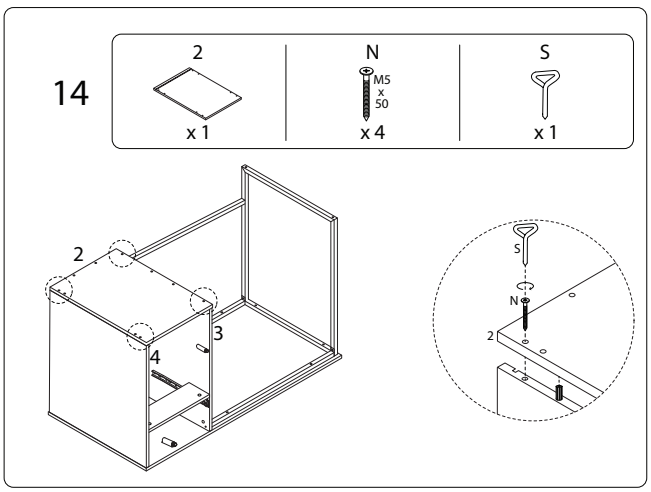

15

14	16	C	P
x 1	x 1	M6 x 40 x 2	x 1

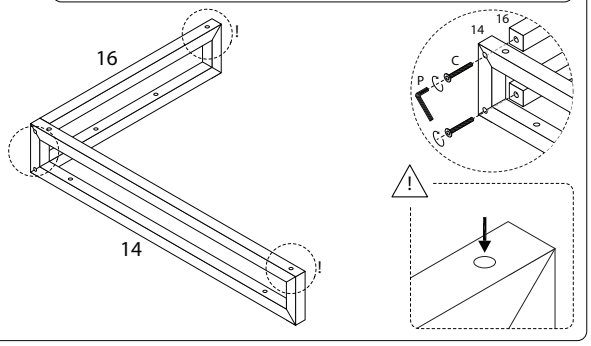

16

15	F	P
x 1	M6 x 30 x 6	x 1

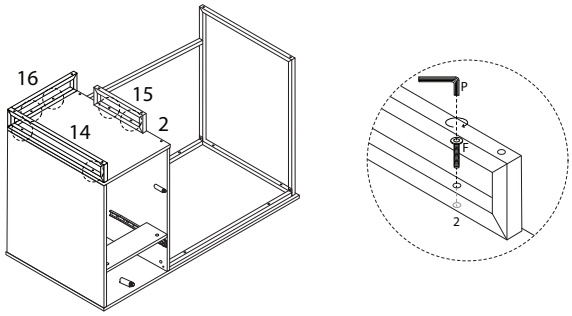

17

O
x 7

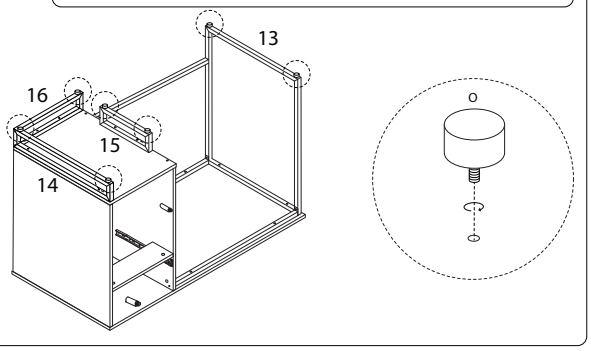

18

I	J	S
M3.5 x 18 x 6	x 6	x 1

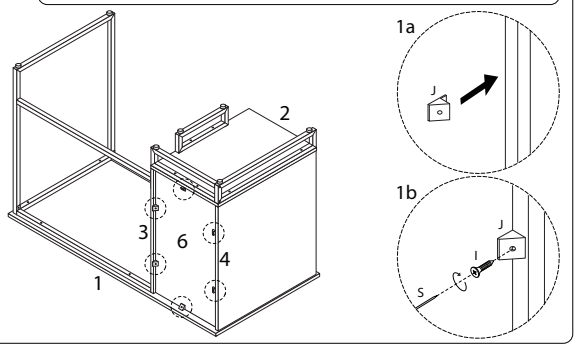

19

7	A1	S
x 1	x 4	x 1

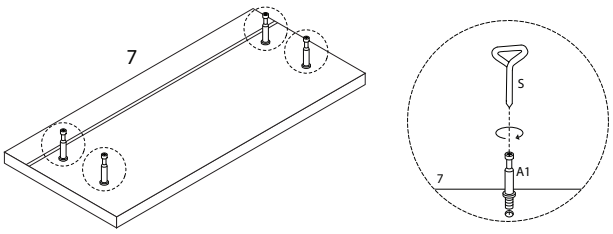

20

8	9	A2	S
x 1	x 1	x 4	x 1

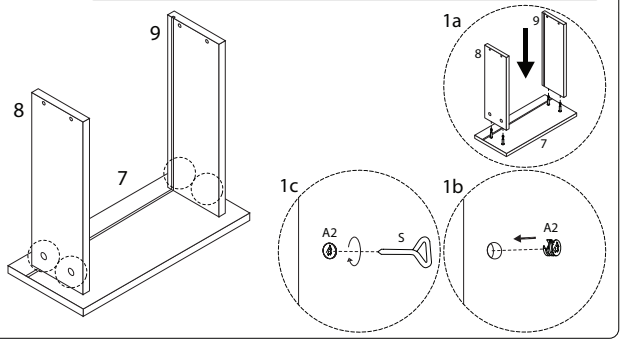

21

11	R
x 1	x 4

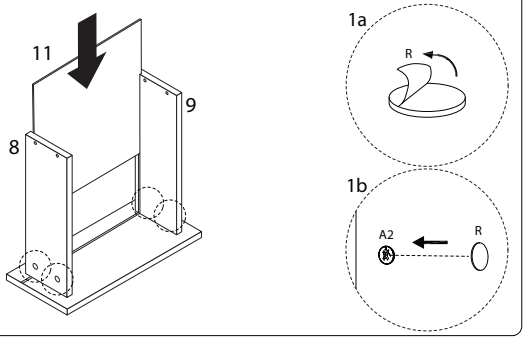

22

10	M	S
x 1	M4 x 35 x 4	x 1

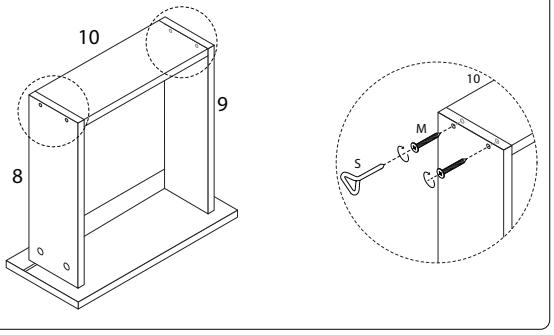

23

E2	E4	H	S
x 1	x 1	M3.5 x 14 x 4	x 1

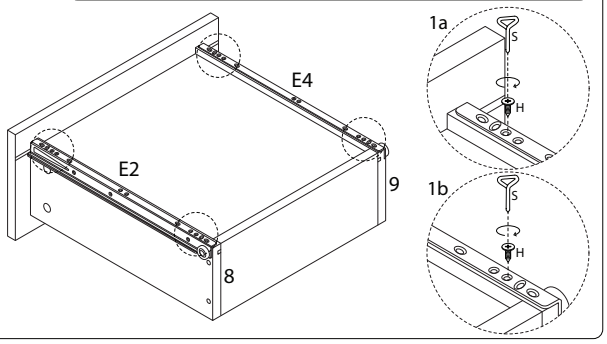

24

12	H	Q	S
x 1	M3.5 x 14 x 4	x 2	x 1

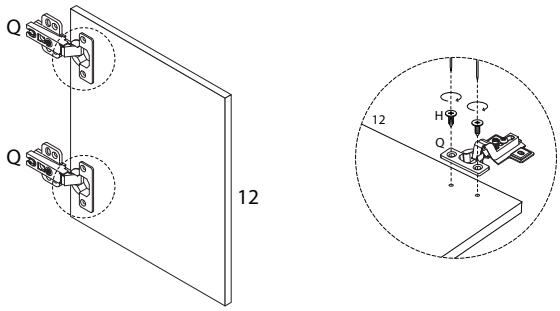

25

H	S
M3.5 x 14 x 8	x 1

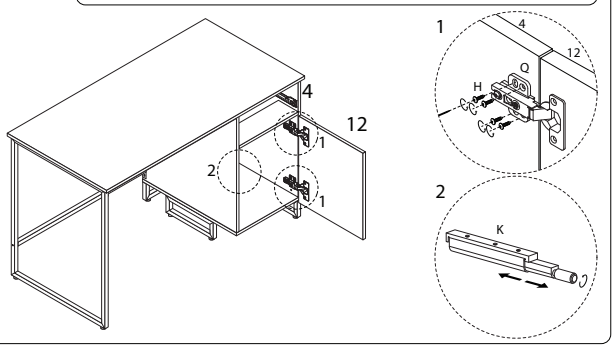
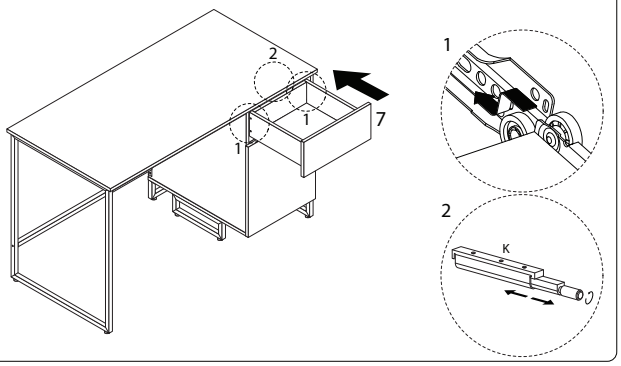
26