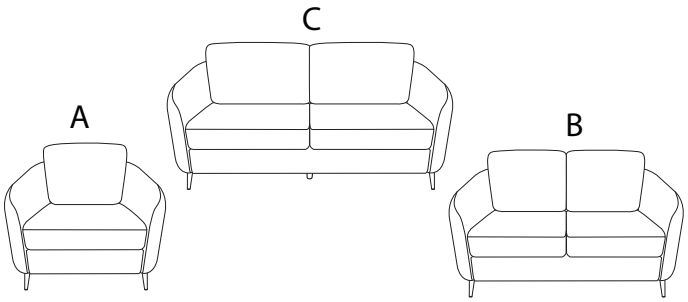
C
A
B

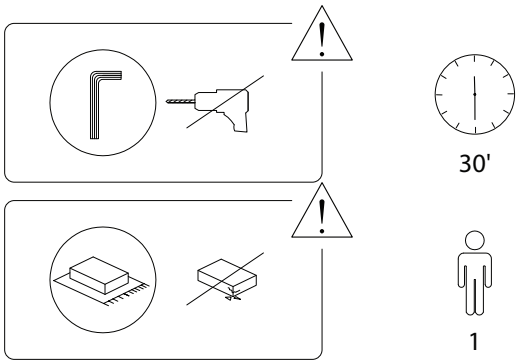
30'
1

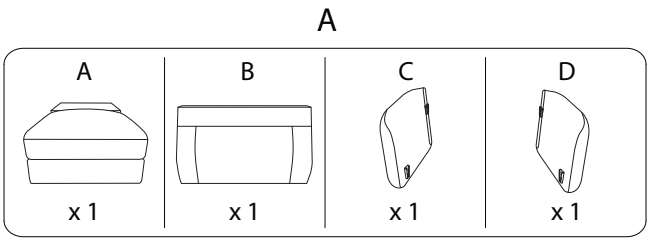
A
A
x 1
B
x 1
C
x 1
D
x 1

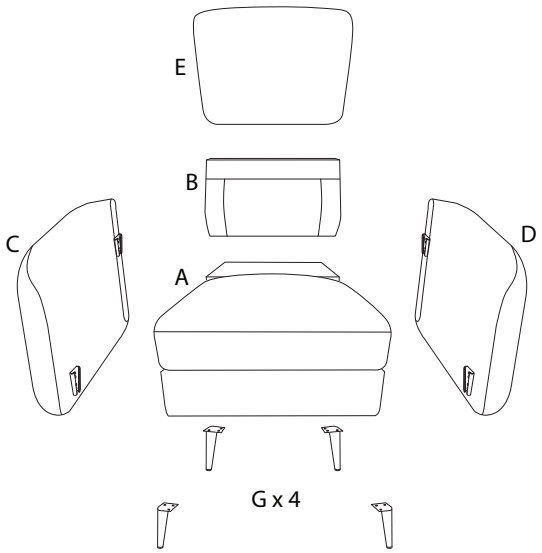
E
B
C
D
A
G x 4

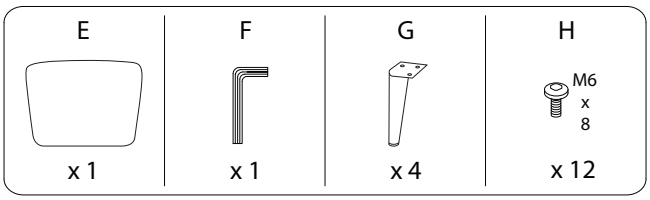
E
x 1
F
x 1
G
x 4
H
M6
x
8
x 12

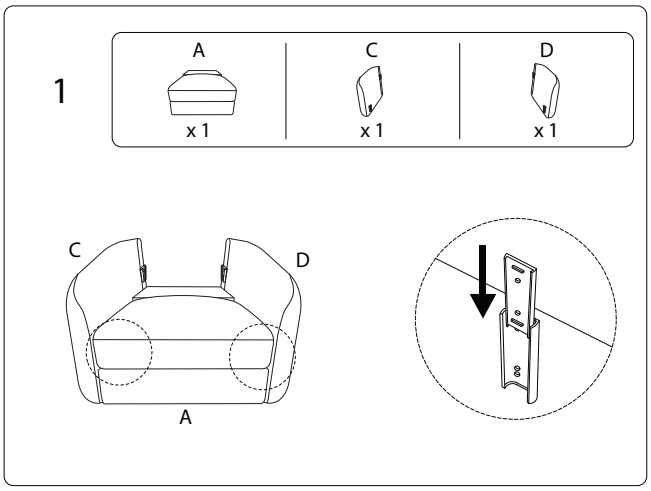
1
A
x 1
C
x 1
D
x 1
C
D
A

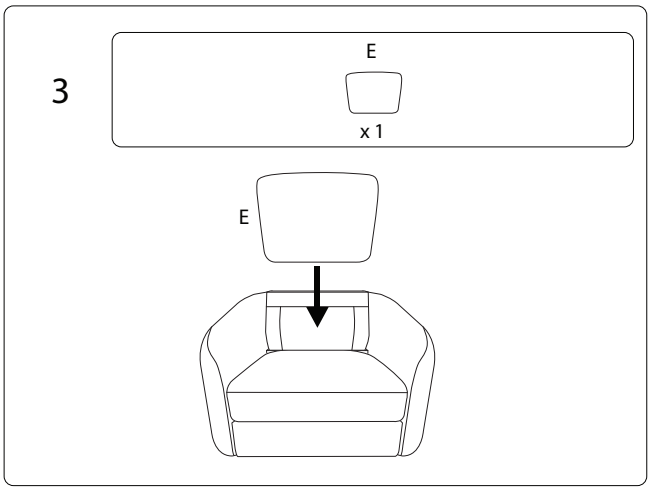
3
E
x 1
E

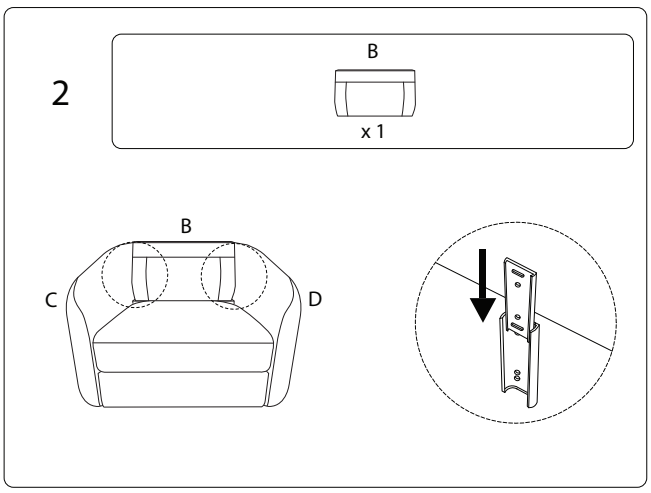
2
B
x 1
B
C
D

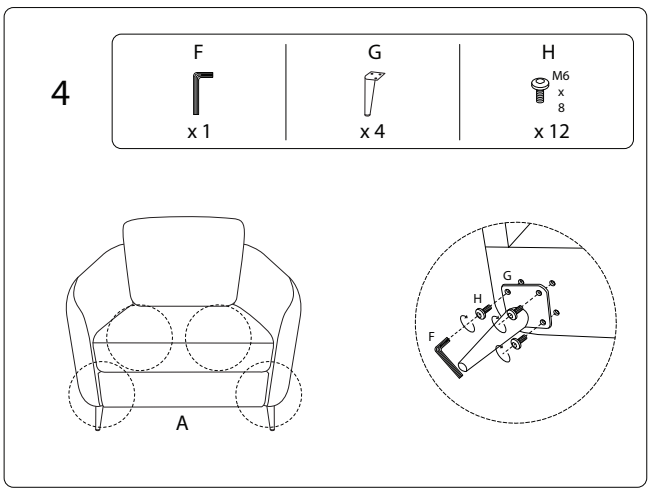
4
F
x 1
G
x 4
H
M6
x
8
x 12
A
G
H
F

B

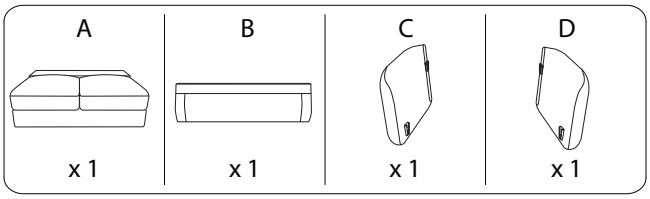

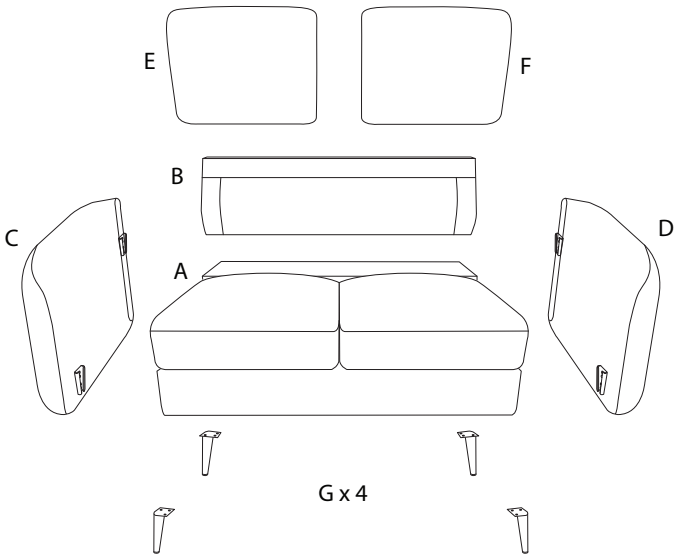

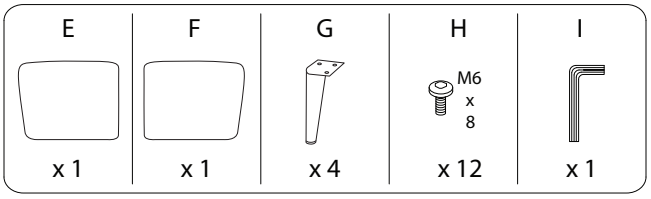

590/TROSA/150822/

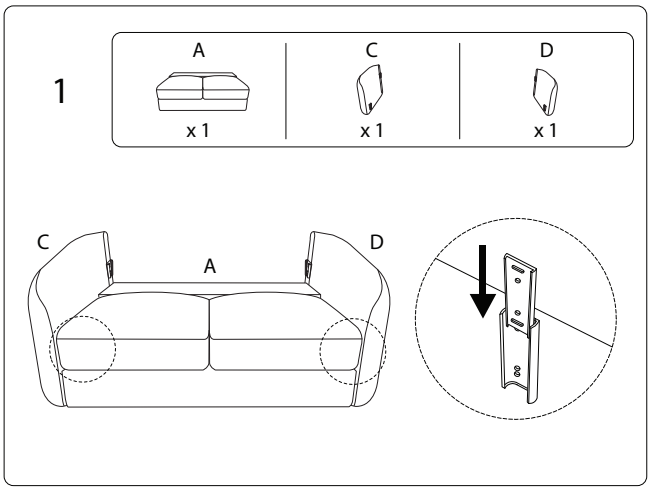

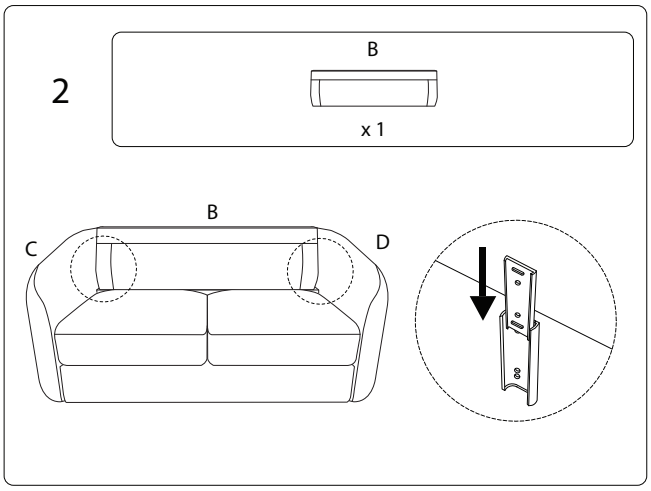

590/TROSA/150822/

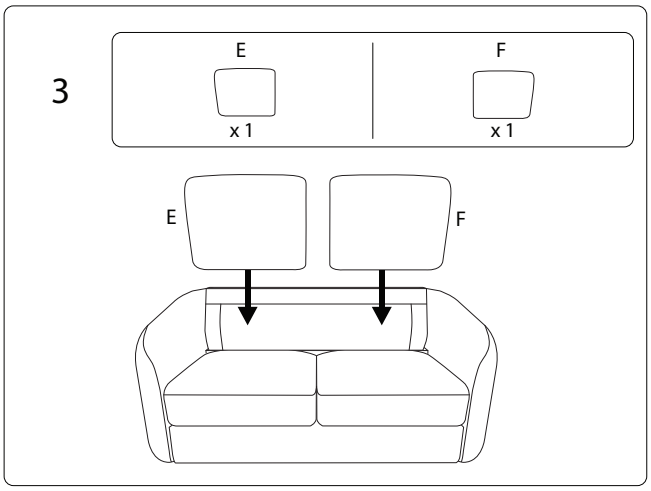

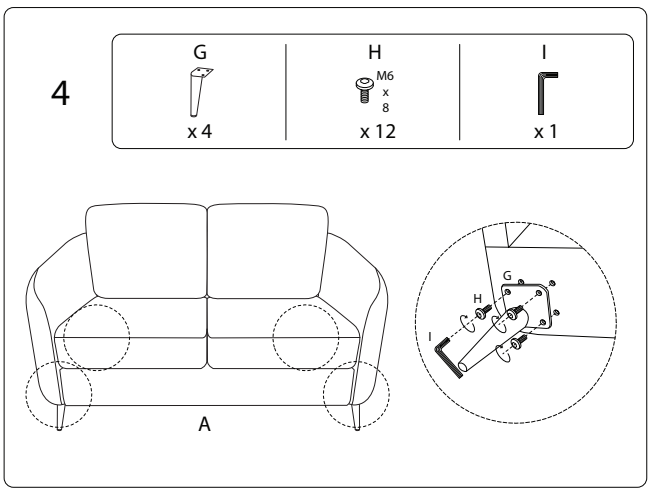

590/TROSA/150822/

C

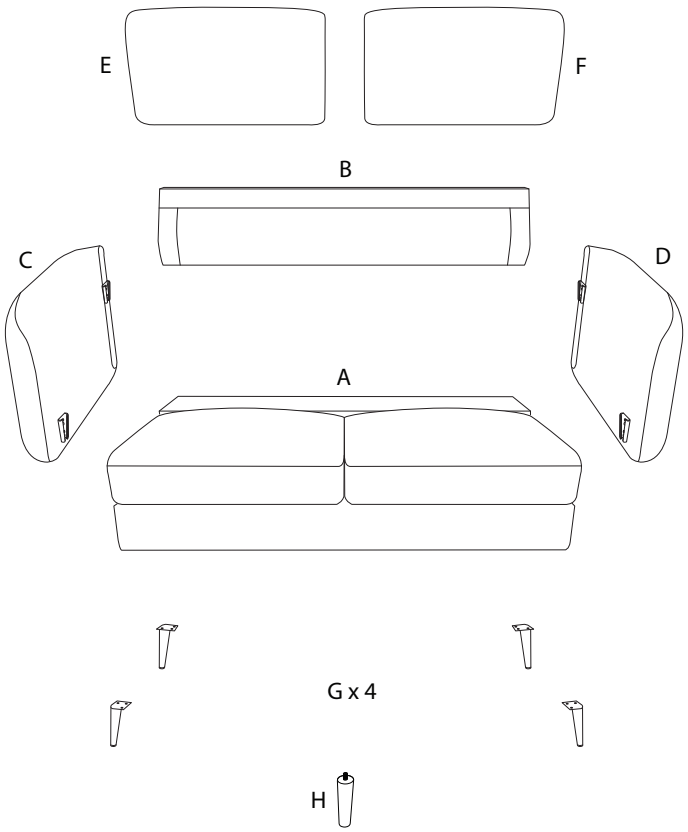

590/TROSA/150822/

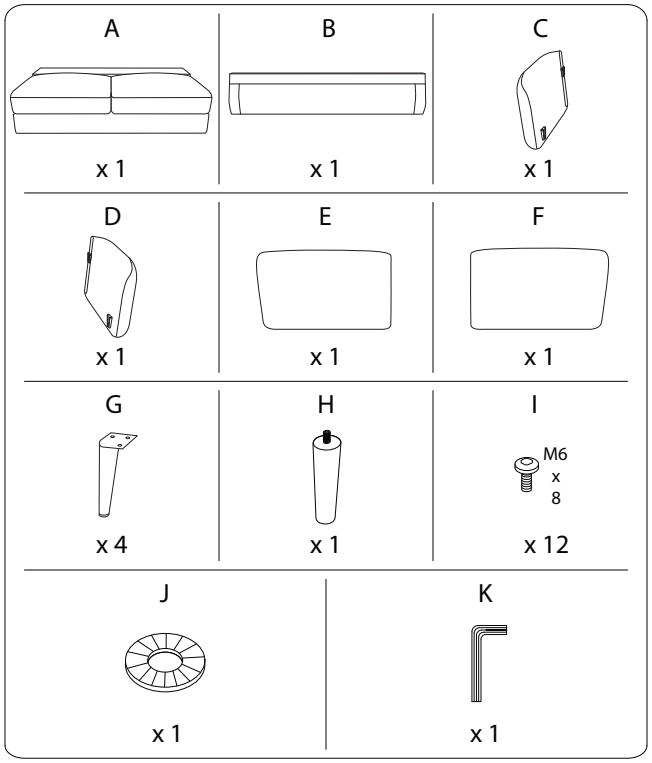
A
x 1
B
x 1
C
x 1
D
x 1
E
x 1
F
x 1
G
x 4
H
x 1
I
M6
x
8
x 12
J
x 1
K
x 1

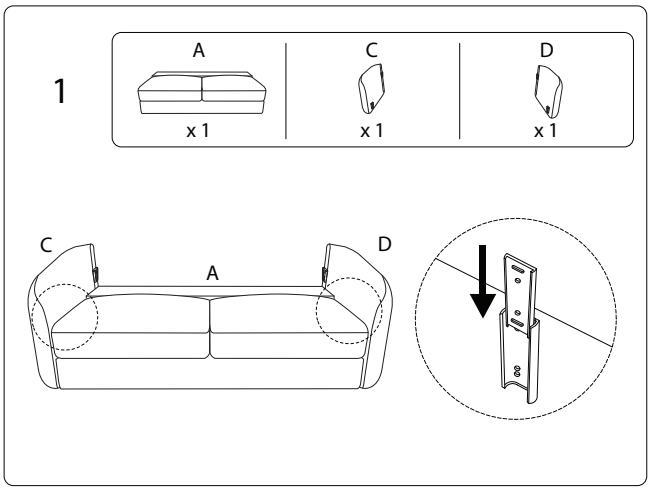
1
A
x 1
C
x 1
D
x 1
C
A
D

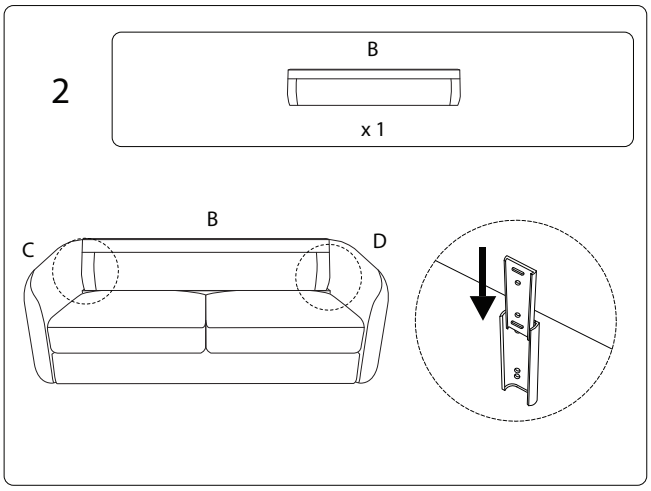
2
B
x 1
B
C
D

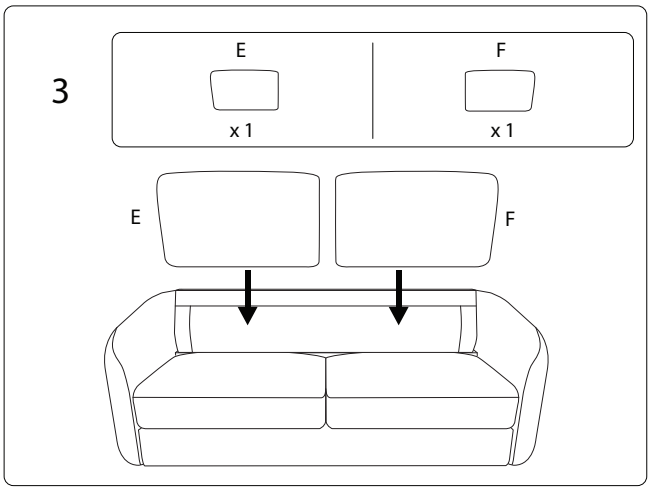
3
E
x 1
F
x 1
E
F

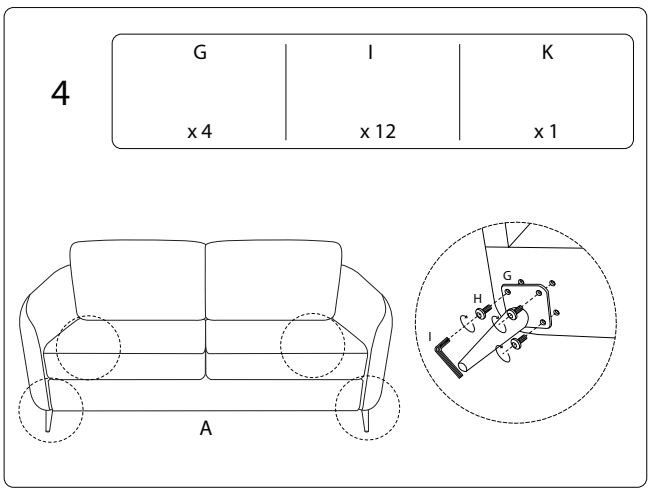
4
G
x 4
I
x 12
K
x 1
A
G
H
I

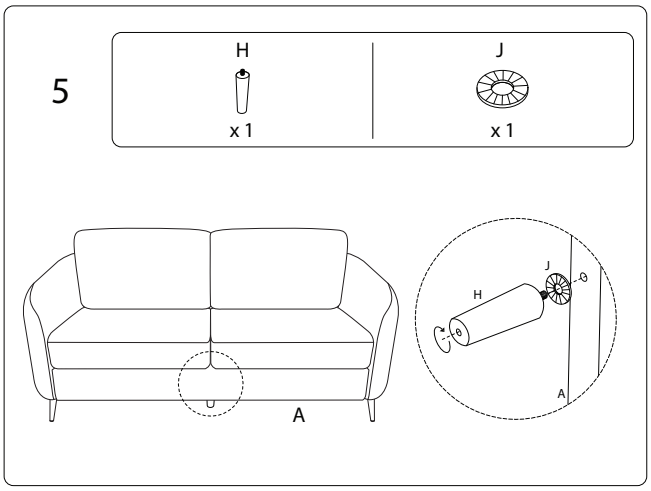
5
H
x 1
J
x 1
A
H
J
A