BLYTHE

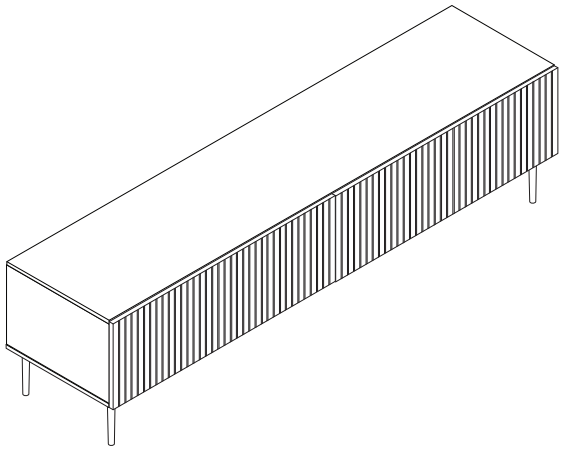

1/15

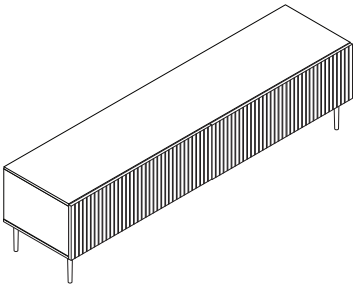

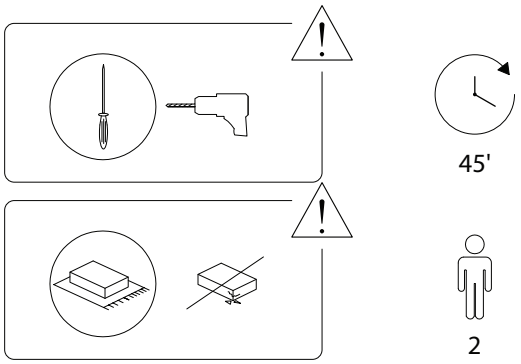

2/15

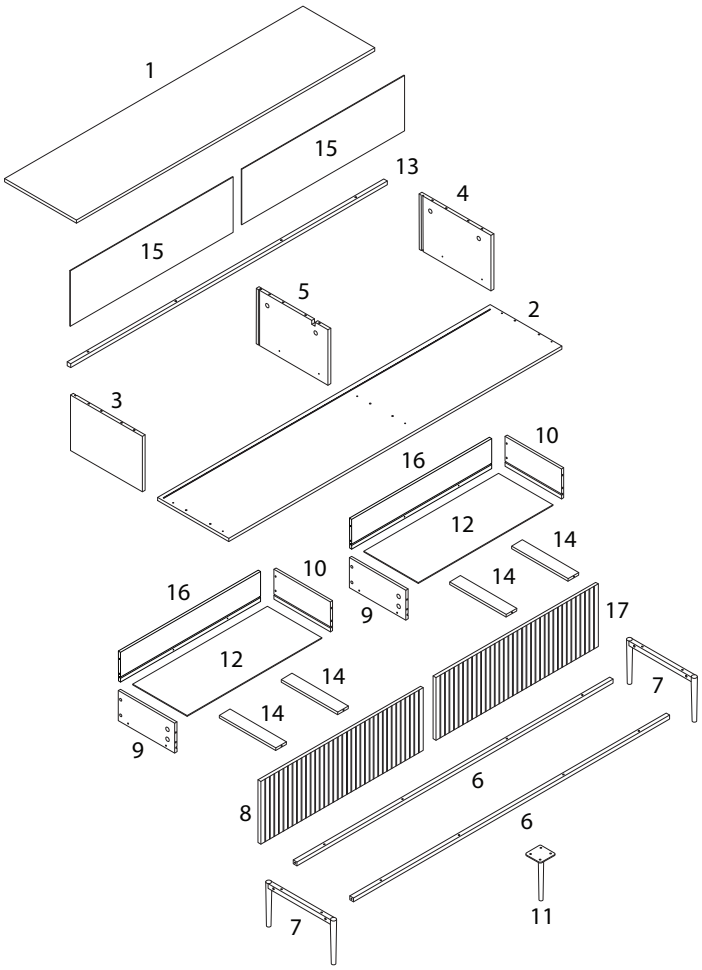

3/15

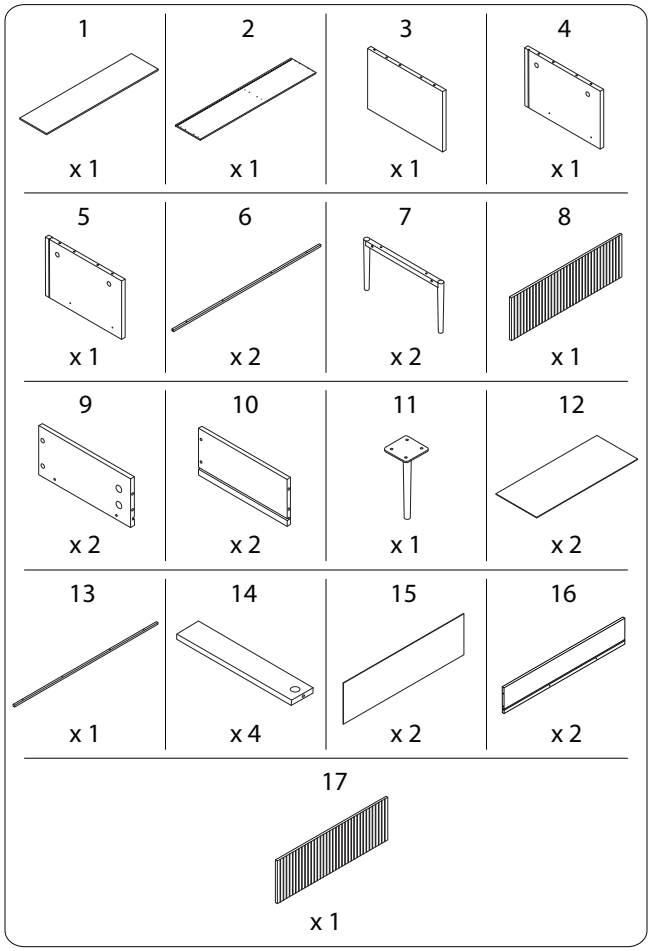

4/15

1444/BLYTHE/110526/

A	B	C	D
			
x 18	x 18	x 12	x 6
E	**F**	**CL**	**CR**
			
x 16	x 12	x 2	x 2
DL	**DR**	**H**	**J**
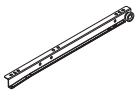	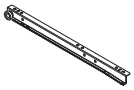		
x 2	x 2	x 16	x 4

K



x 4

1

5	E	CL	CR
x 1	x 4	x 1	x 1

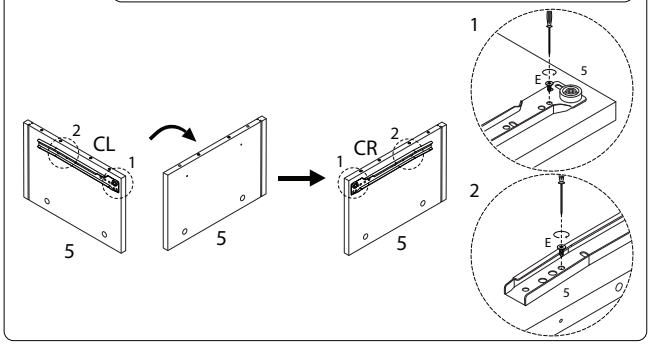

2

3	4	E	CL	CR
x 1	x 1	x 4	x 1	x 1

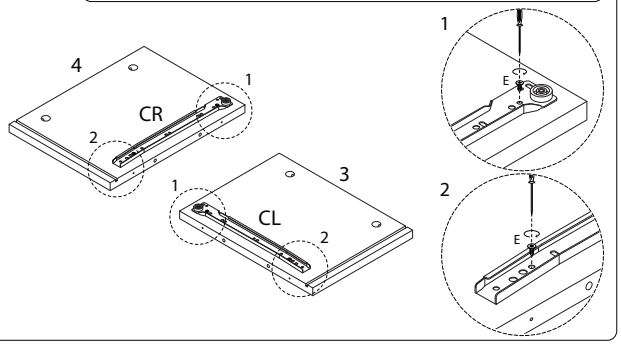

3

1	A	C
x 1	x 6	x 6

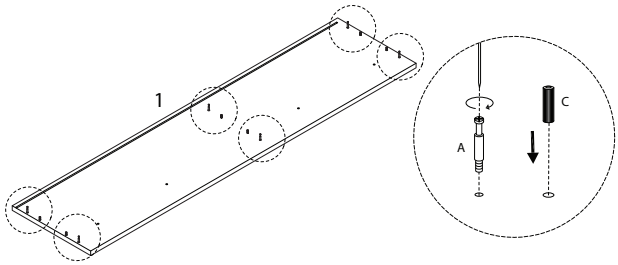

5

B
x 6

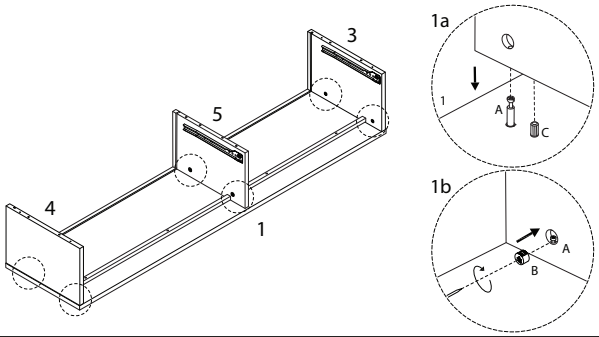

4

13	K
x 1	x 4

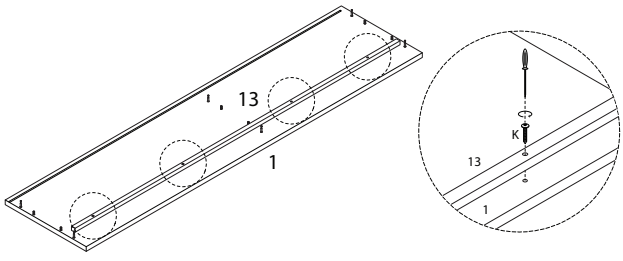

6

15
x 2

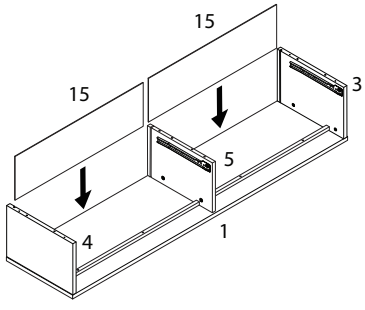

7

C
x 6

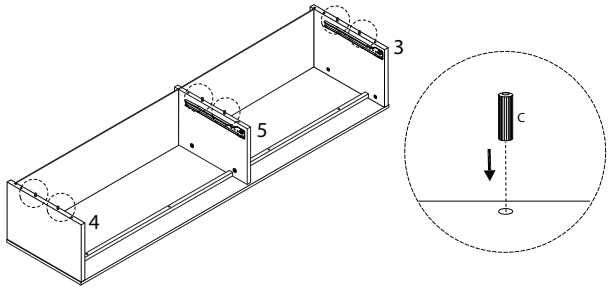

8

2
x 1

D
M4 x 40
x 6

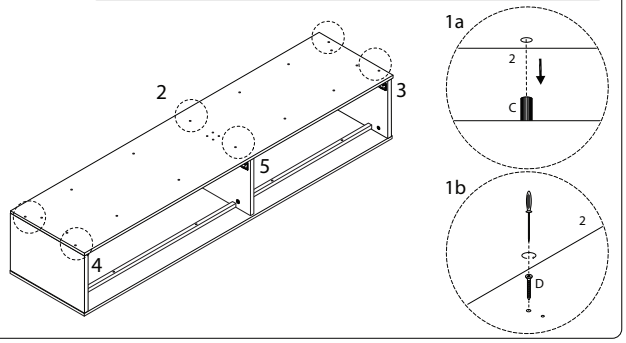

9/15

9

6
x 2

7
x 2

H
M6 x 30
x 4

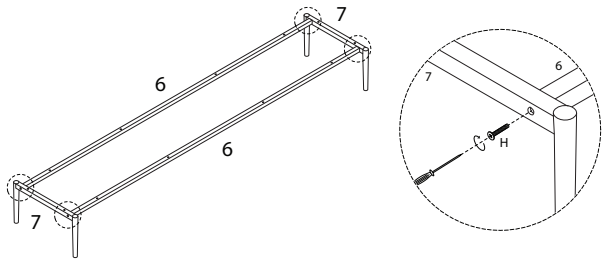

10

H
M6 x 30
x 12

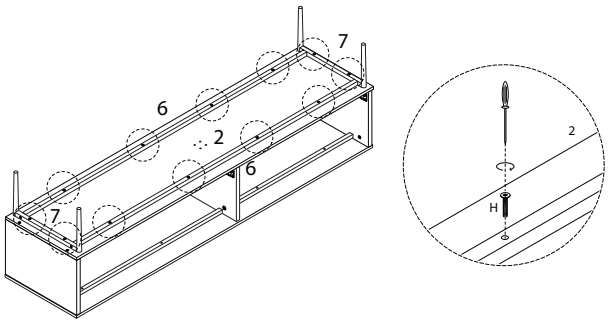

10/15

11

11
x 1

J
M6 x 10
x 4

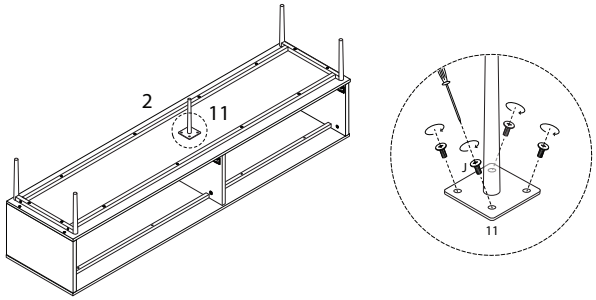

13 x 2

14
x 2

F
M4 x 30
x 2

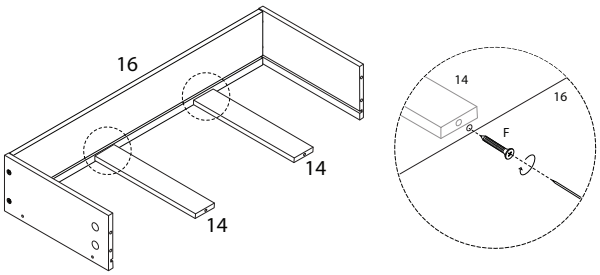

12 x 2

9
x 1

10
x 1

16
x 1

F
M4 x 30
x 4

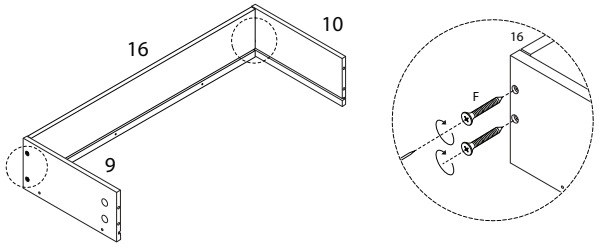

11/15

14 x 2

12
x 1

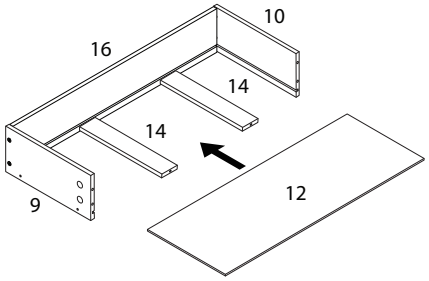

12/15

15

8	17	A
x 1	x 1	x 12

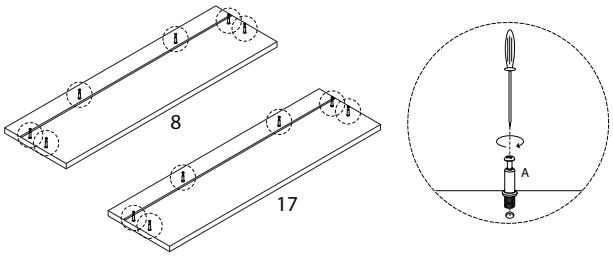

16

B
x 12

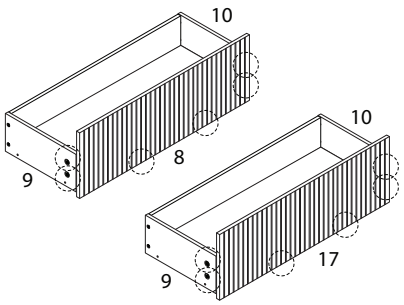

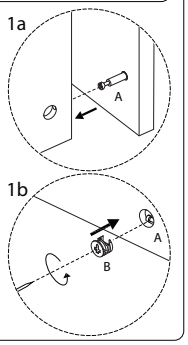

17

E	DL	DR
M3 x 12		
x 8	x 2	x 2

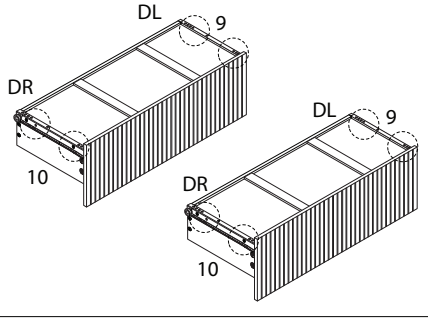

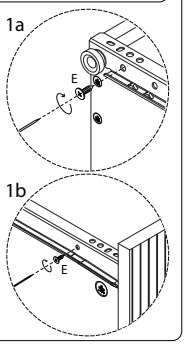

18

