ALSVAG

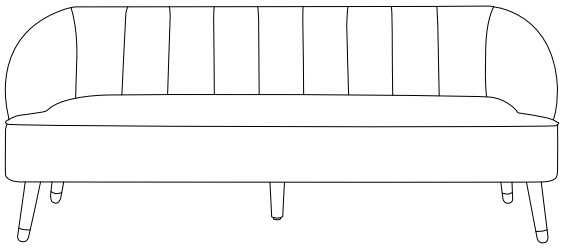

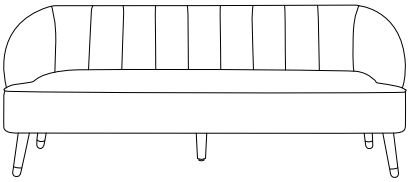

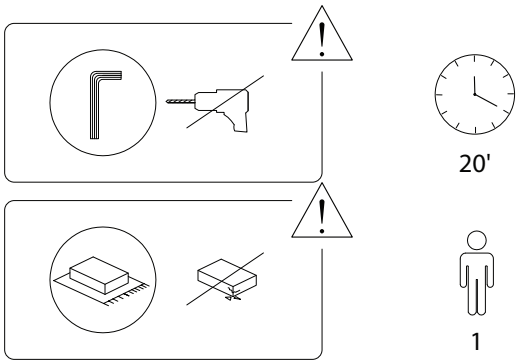

1/3

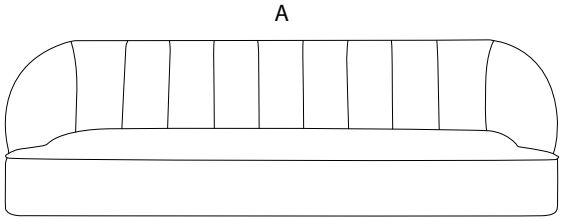





A	B	C	D	E
x 1	x 4	x 1	M8 x 20 x 16	x 1

2/3

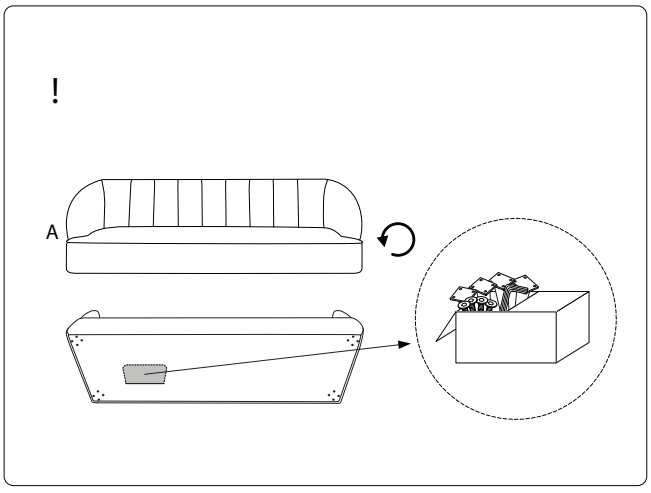

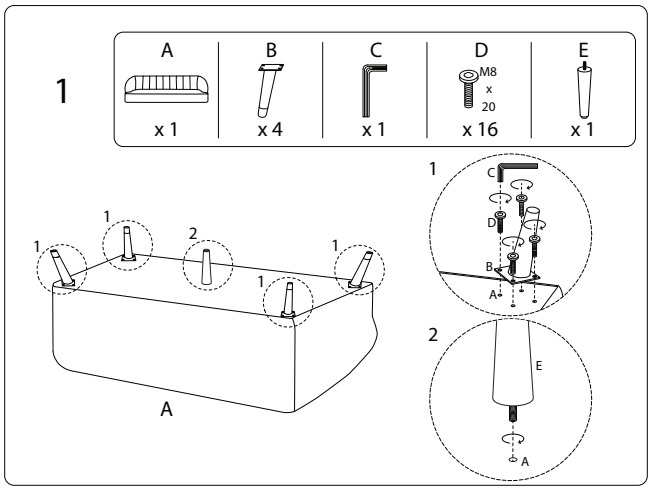

3/3