MALENY

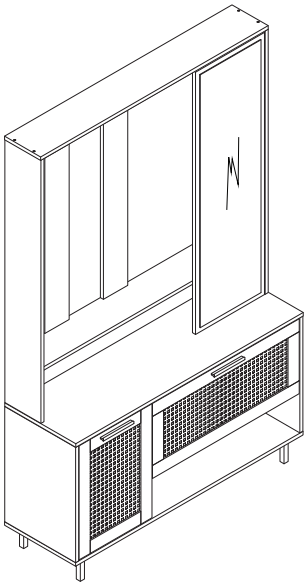

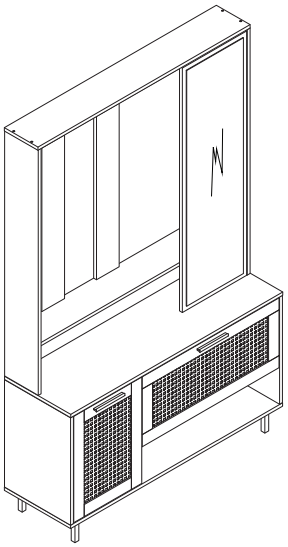

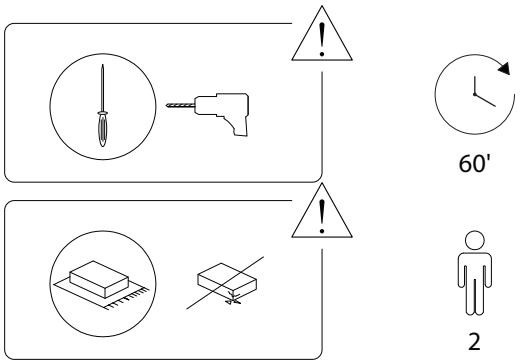
60'
2

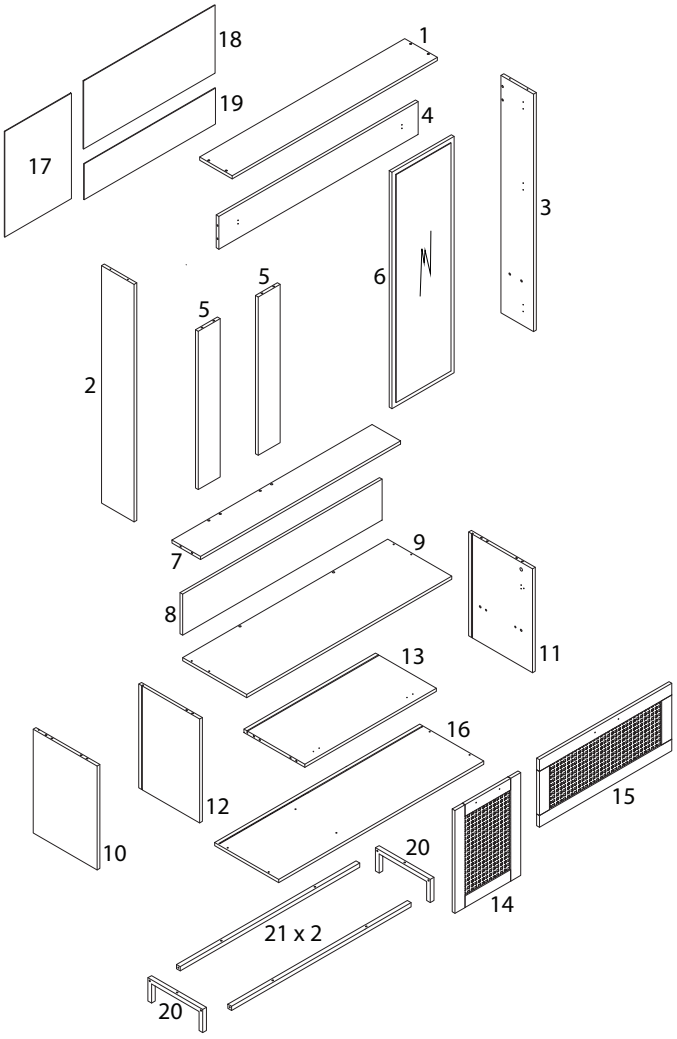
18
1
19
4
17
3
6
5
5
2
7
9
8
11
13
16
12
15
10
20
14
21 x 2
20

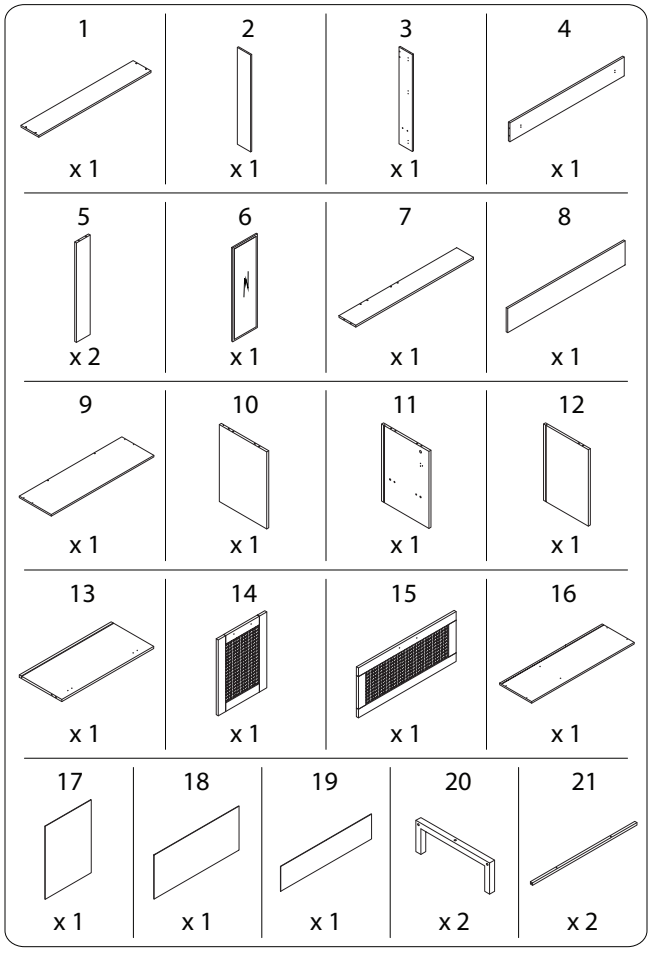
1 x 1
2 x 1
3 x 1
4 x 1
5 x 2
6 x 1
7 x 1
8 x 1
9 x 1
10 x 1
11 x 1
12 x 1
13 x 1
14 x 1
15 x 1
16 x 1
17 x 1
18 x 1
19 x 1
20 x 2
21 x 2

A	B	C	D	E
x 32	x 32	x 10	M3.5 x 14 x 57	M5 x 40 x 14
F	**G**	**H**	**I**	**J**
M6 x 30 x 6	M6 x 35 x 4	x 5	x 2	M4 x 18 x 4
K1	**K2**	**K3**	**L**	**M**
x 1	x 1	x 1	x 5	x 2
N	**O**	**P1**	**P2**	**P3**
x 4	x 30	x 1	x 2	x 1
P4	**P5**	**Q**	**R**	**S**
M3.5 x 12 x 1	M4 x 35 x 1	x 12	M3 x 12 x 12	x 1

2754/MALENY/160726/

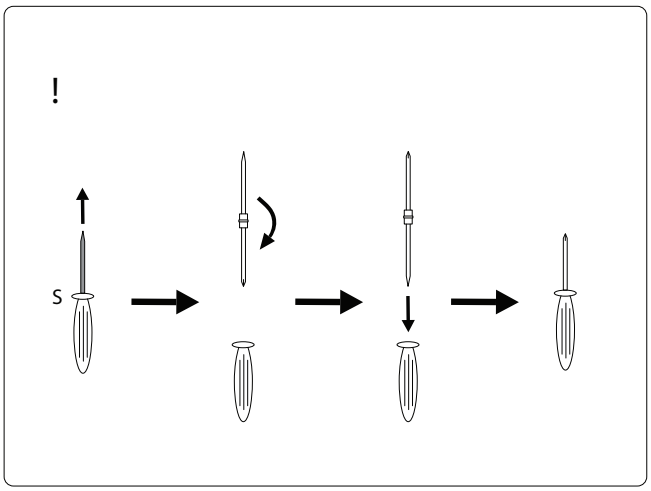

1

14	D	I	J	L	S
x 1	M3.5 x 14 x 4	x 1	M4 x 18 x 2	x 2	x 1

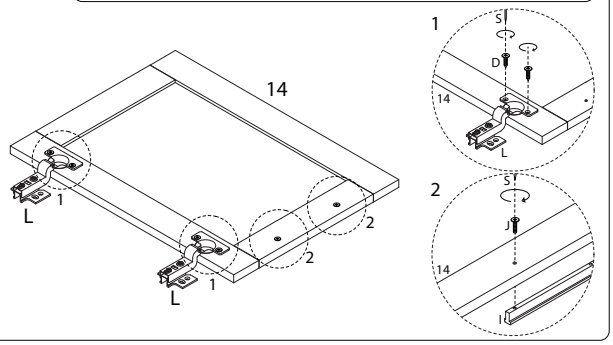

2754/MALENY/160726/

2

1	2	3	7	9	12	A	S
x 1	x 1	x 1	x 1	x 1	x 1	x 26	x 1

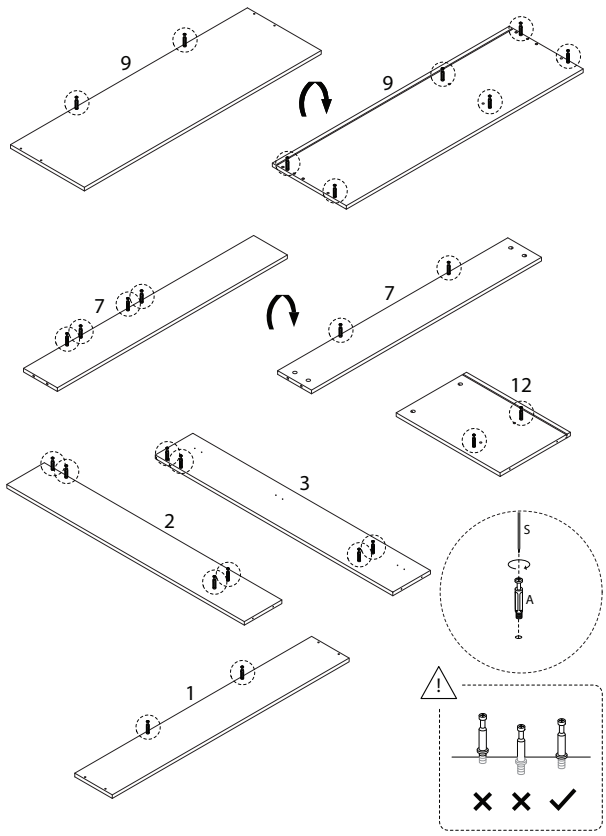

2754/MALENY/160726/

3

4	6	11	A	D	K2	L	S
x 1	x 1	x 1	x 6	M3.5 x 14 x 9	x 1	x 3	x 1

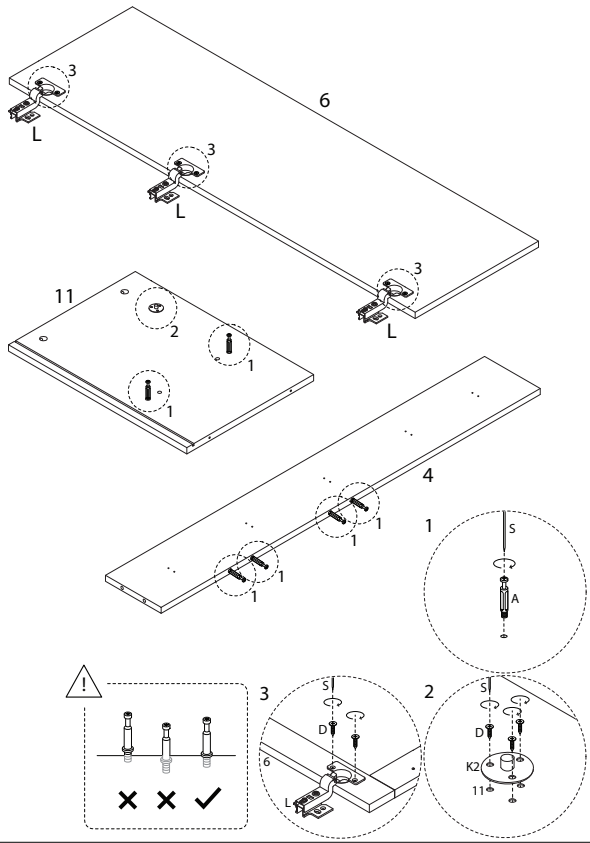

2754/MALENY/160726/

4

15	D	I	J	K1	M	S
x 1	M3.5 x 14 x 6	x 1	M4 x 18 x 2	x 1	x 2	x 1

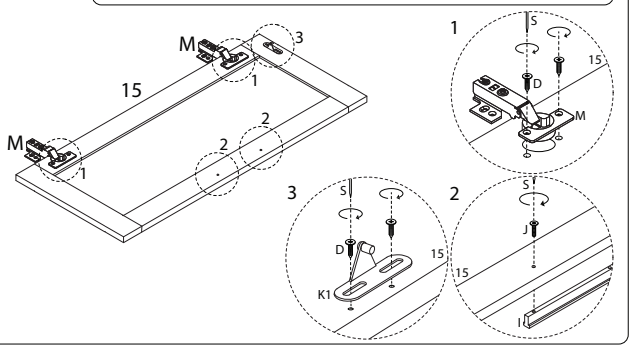

5

5	B	S
x 2	x 4	x 1

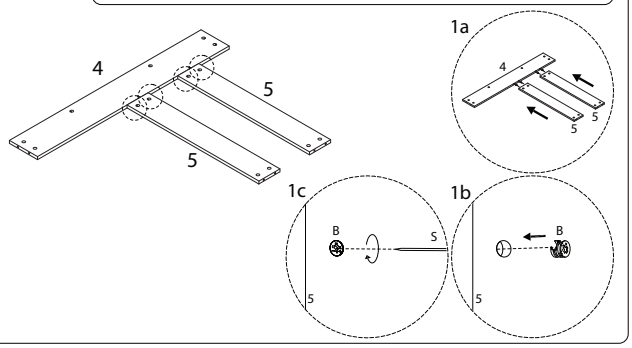

6

B	S
x 4	x 1

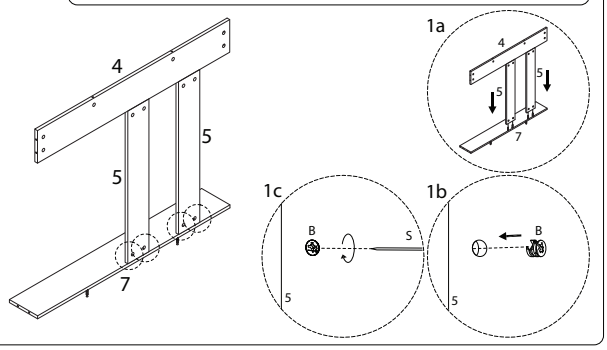

7

B	S
x 4	x 1

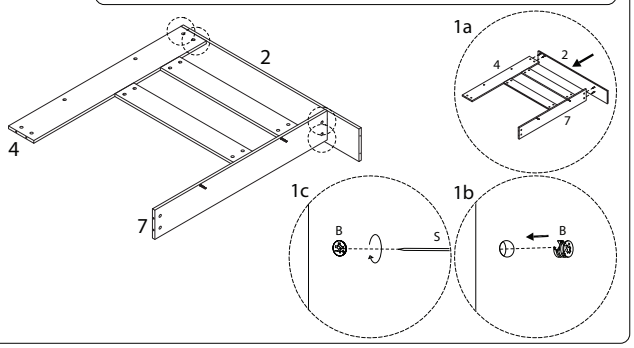

8

B	S
x 4	x 1

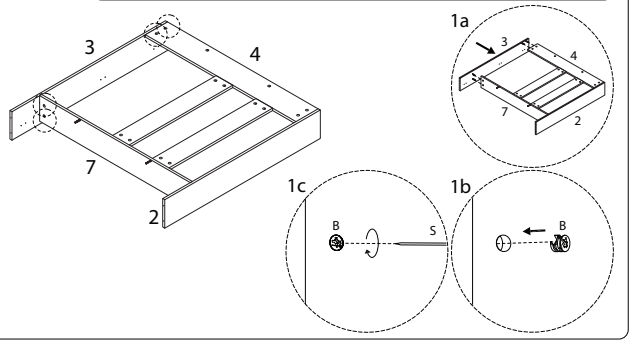

9

B	S
x 2	x 1

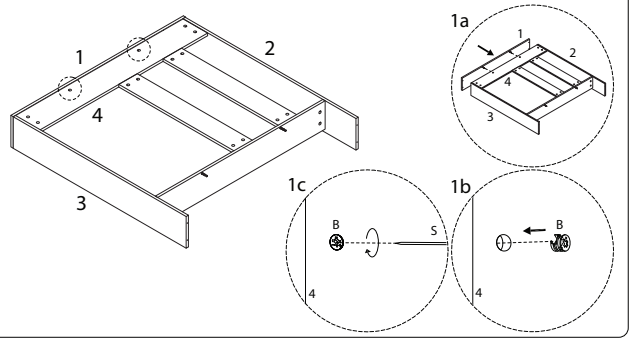

10

E	S
M5 x 40 x 4	x 1

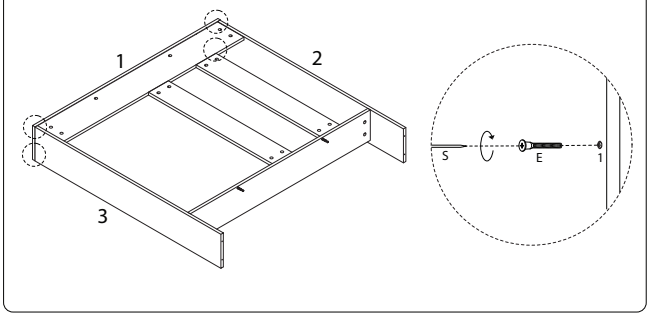

11

8	B	S
x 1	x 2	x 1

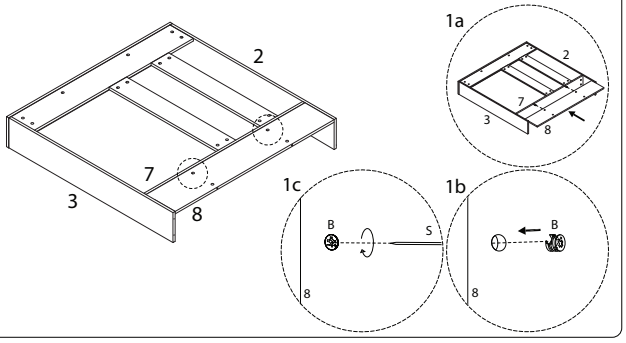

12

B	S
x 2	x 1

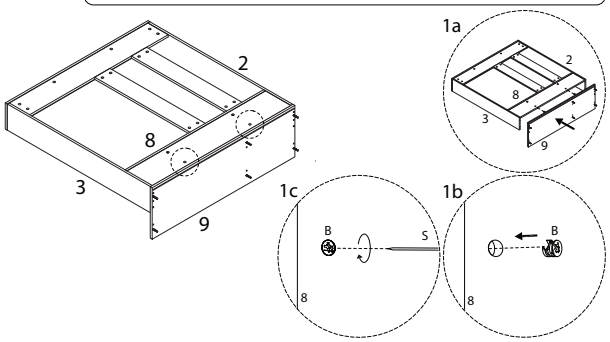

13

E	S
M5 x 40 x 4	x 1

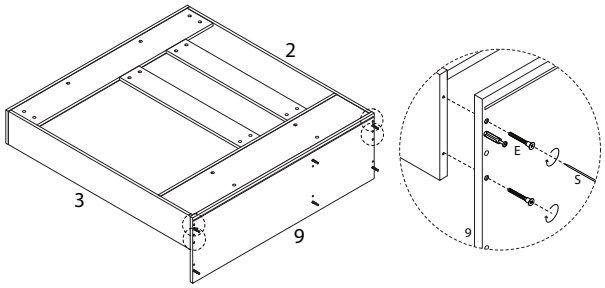

14

D	H	S
M3.5 x 14 x 10	x 5	x 1

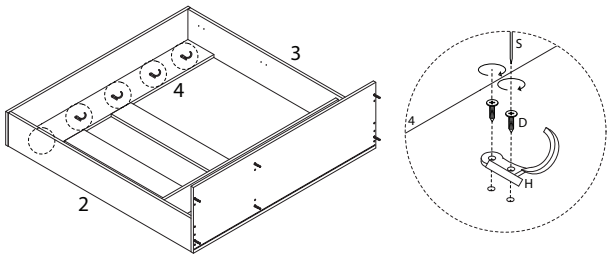

15

10	13	C
x 1	x 1	x 6

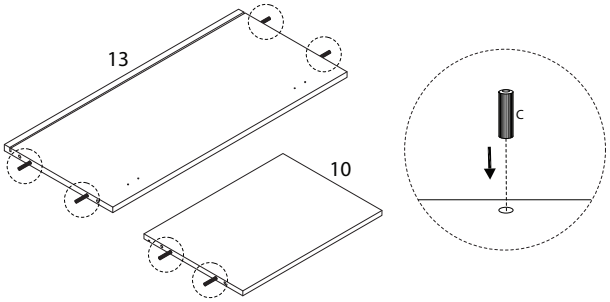

16

B	S
x 4	x 1

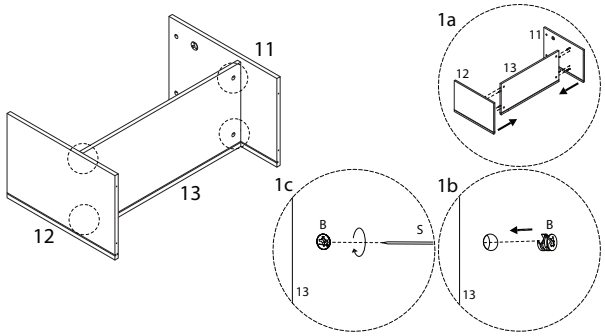

17

18	C
x 1	x 4

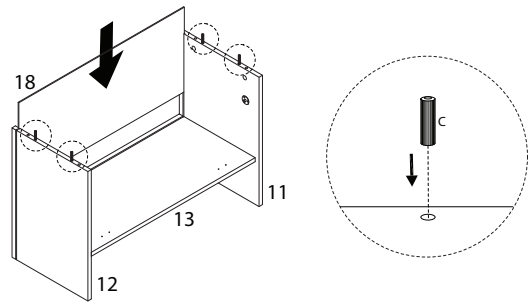

18

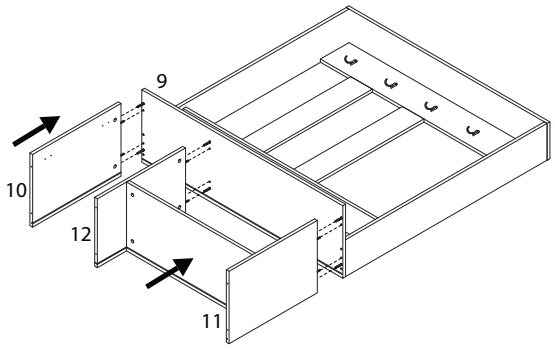

19

B	S
x 6	x 1

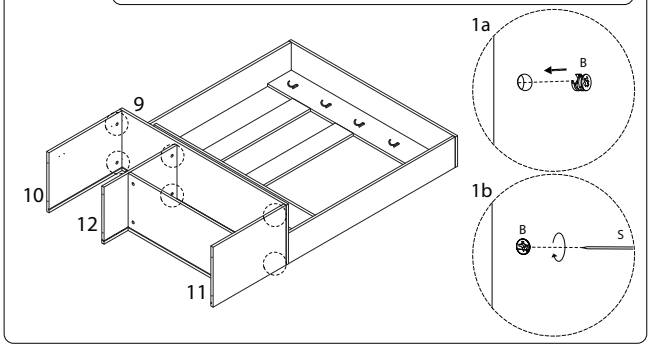

20

17	19
x 1	x 1

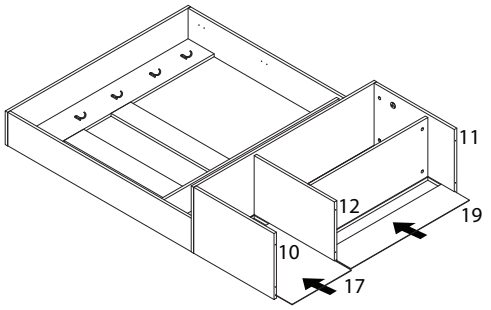

21

16	E	S
x 1	M5 x 40 x 6	x 1

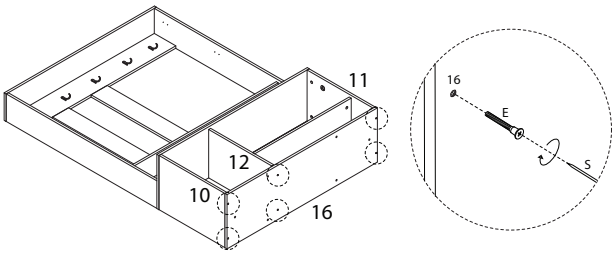

22

20	21	G	N	S
x 2	x 2	M6 x 35 x 4	x 4	x 1

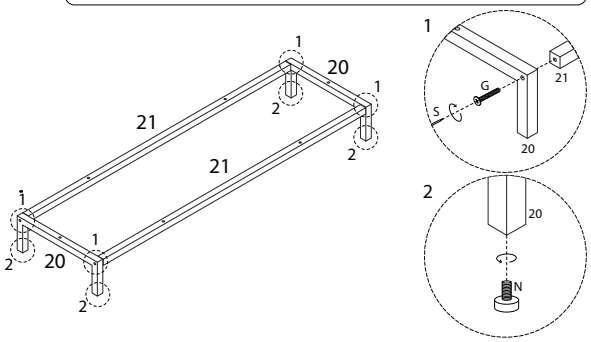

23

F	S
M6 x 30 x 6	x 1

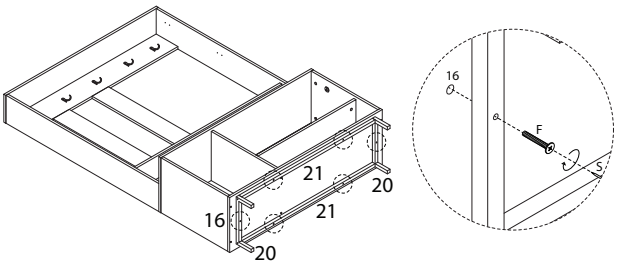

24

D	S
M3.5 x 14 x 20	x 1

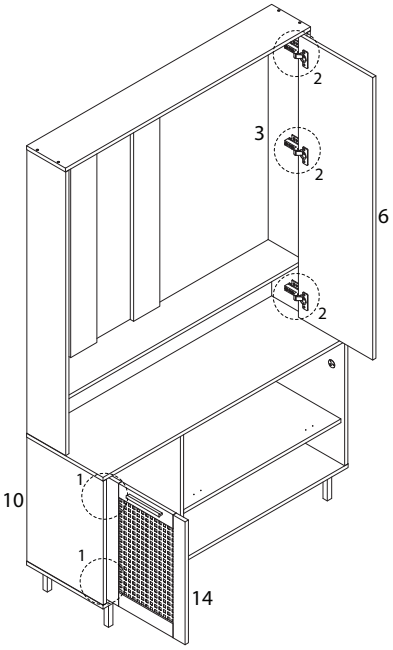

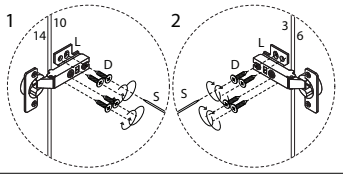

25

D	K3	S
M3.5 x 14 x 8	x 1	x 1

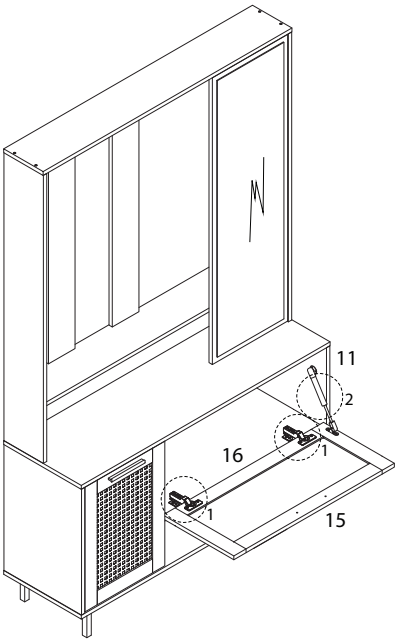

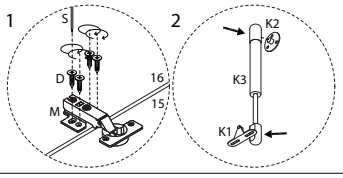

26

O
x 30

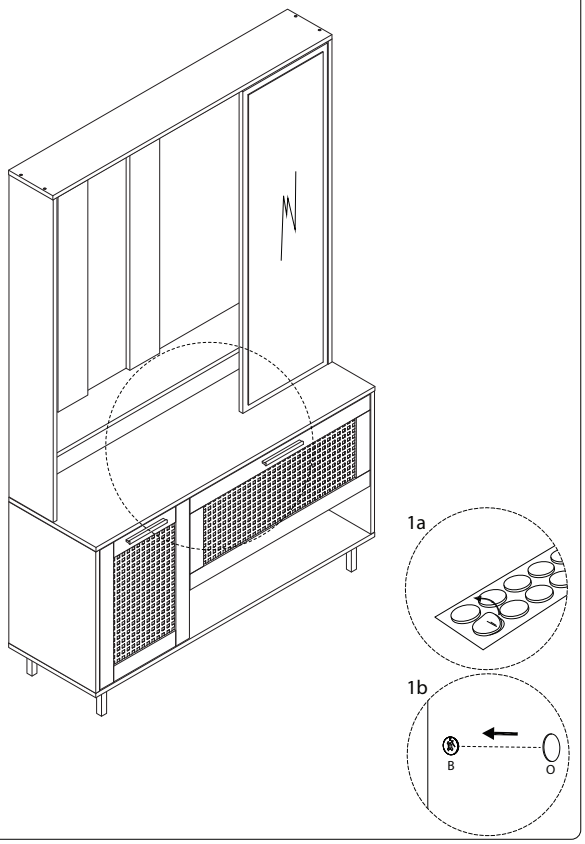

27

Q	R	S
x 12	M3 x 12 x 12	x 1

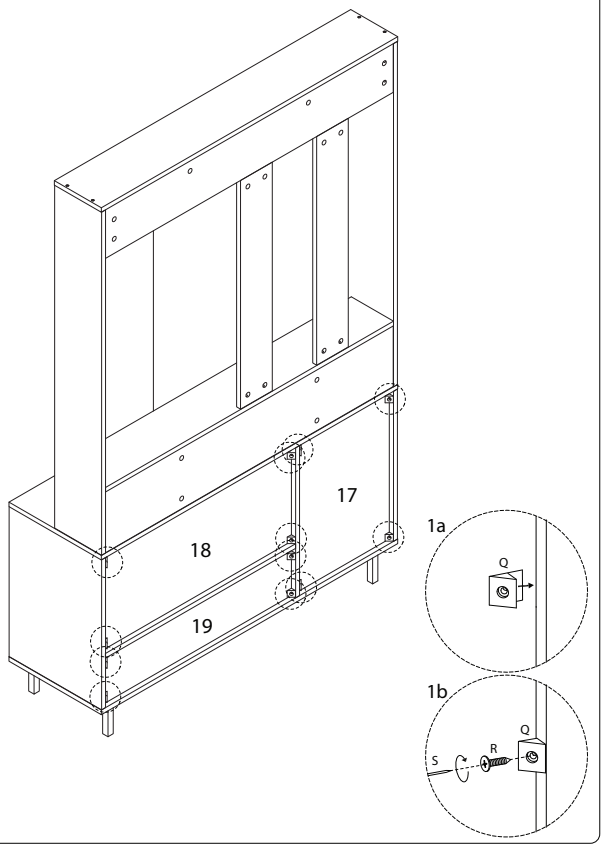

28

P1	P2	P3	P4	P5	S
x 1	x 2	x 1	M3.5 x 12 x 1	M4 x 35 x 1	x 1

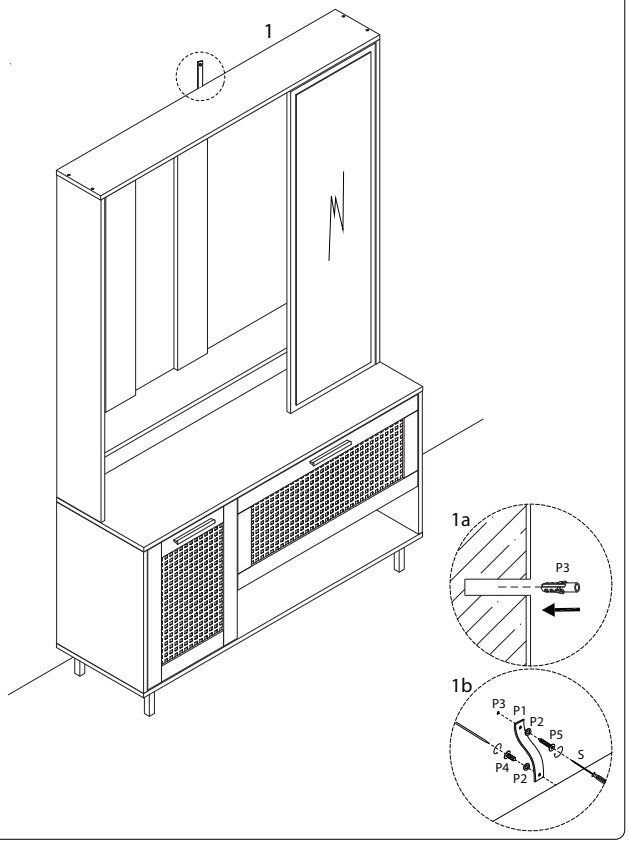
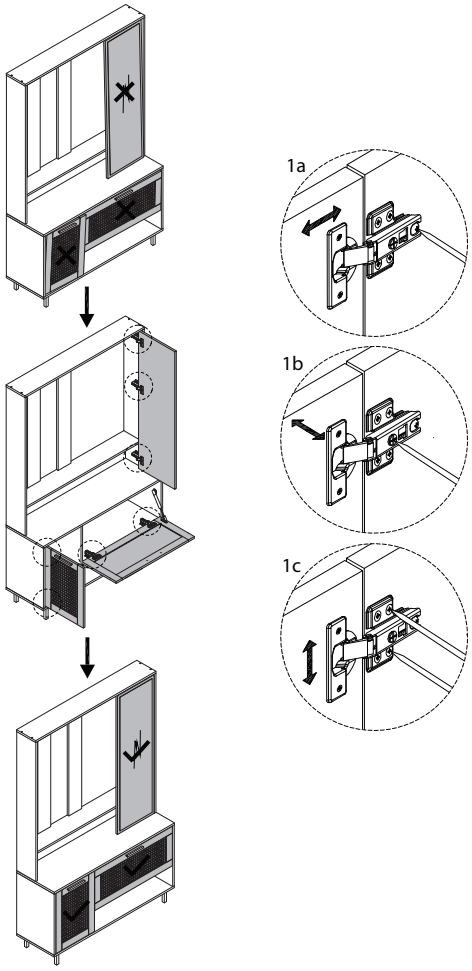
!