LILOET

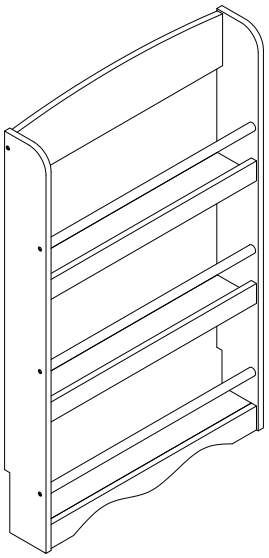

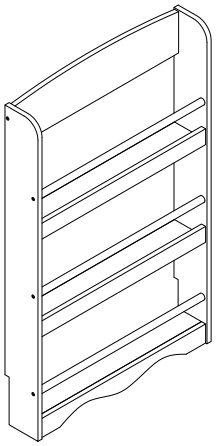

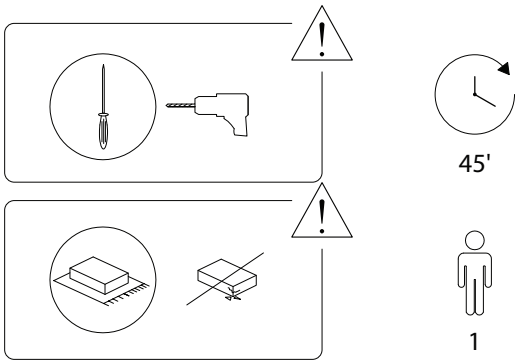

1/8

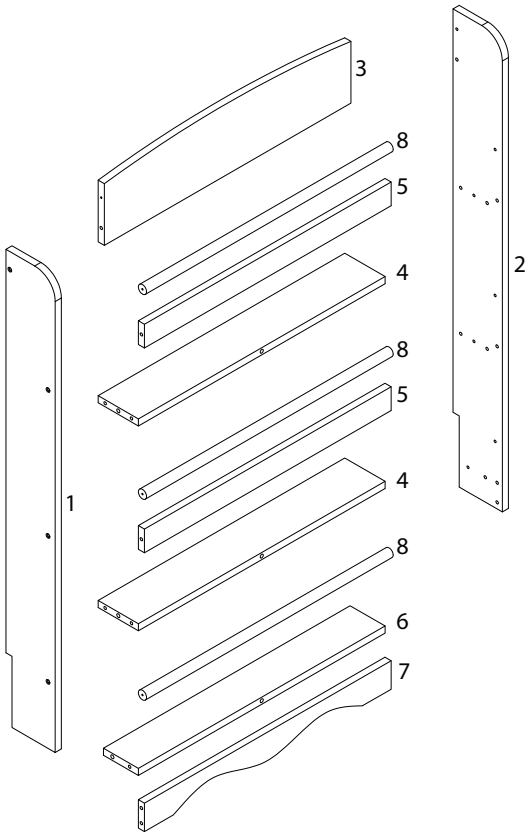

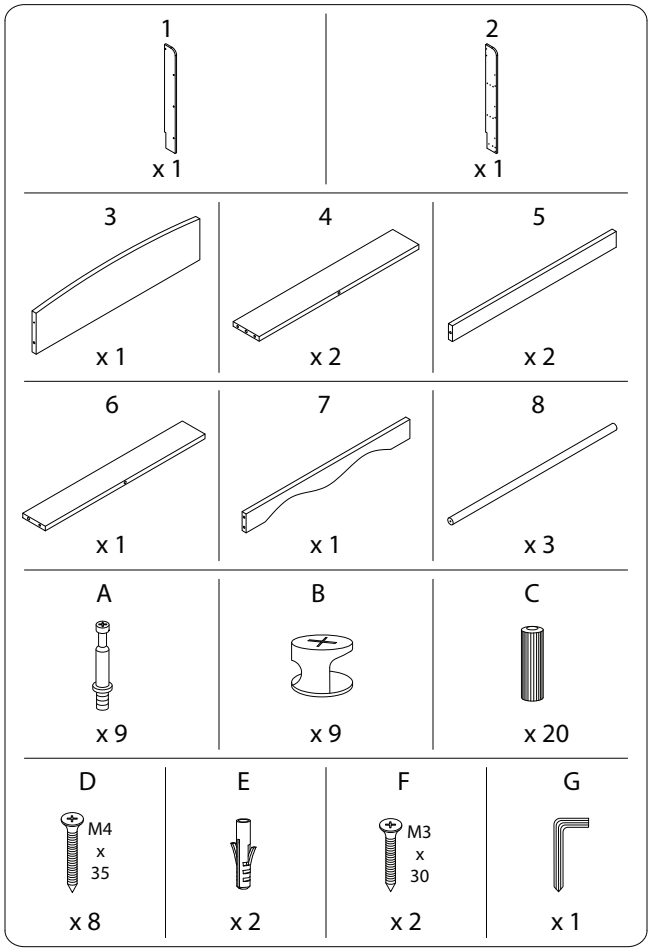

2/8

3/8

1

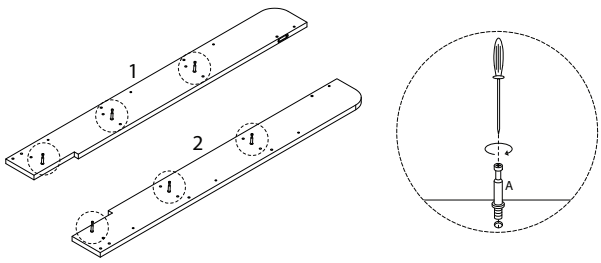
1
x 1
2
x 1
A
x 6

1
2
A

3

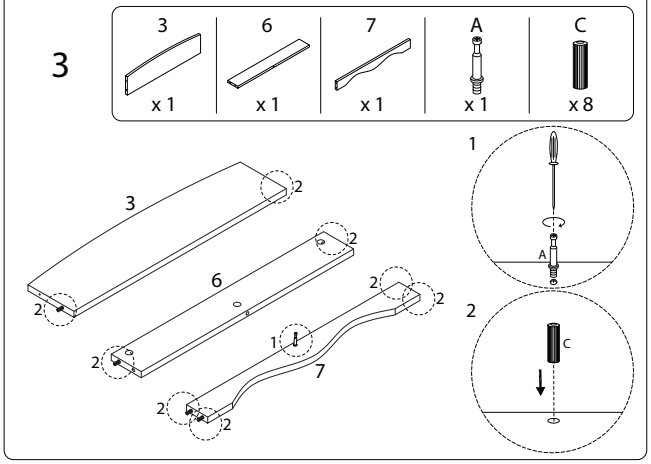
3
x 1
6
x 1
7
x 1
A
x 1
C
x 8
1
A
2
C

2 x 2

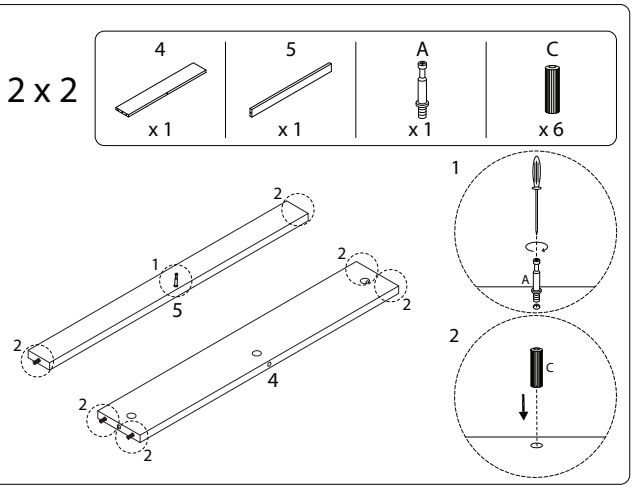
4
x 1
5
x 1
A
x 1
C
x 6
1
A
2
C

4

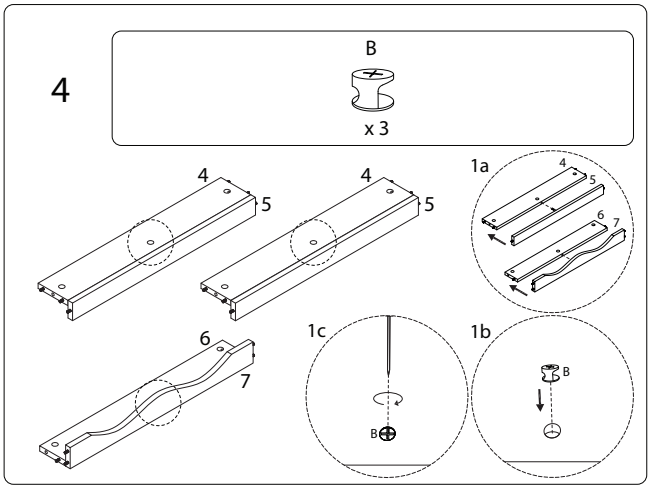
B
x 3
1a
1c
1b
B

5

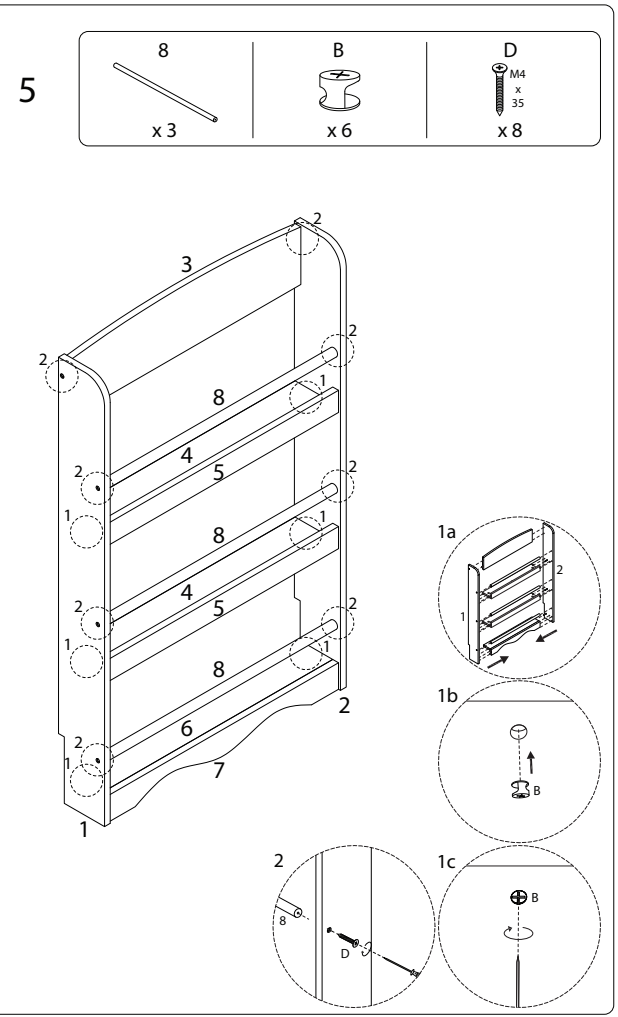
8
x 3
B
x 6
D
M4
x
35
x 8
1a
1b
1c
B
D

6

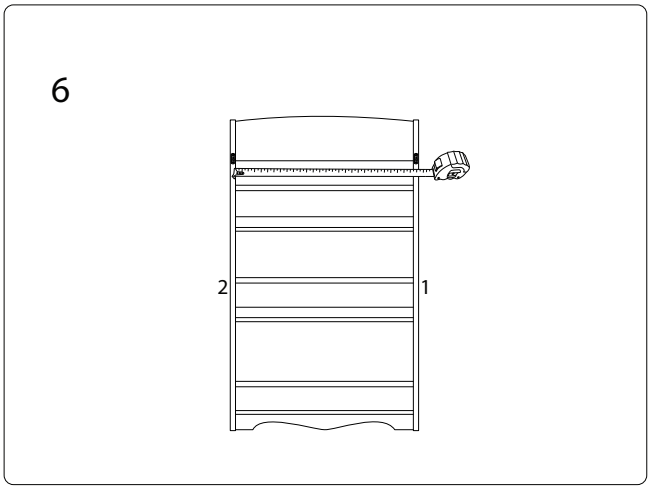

7

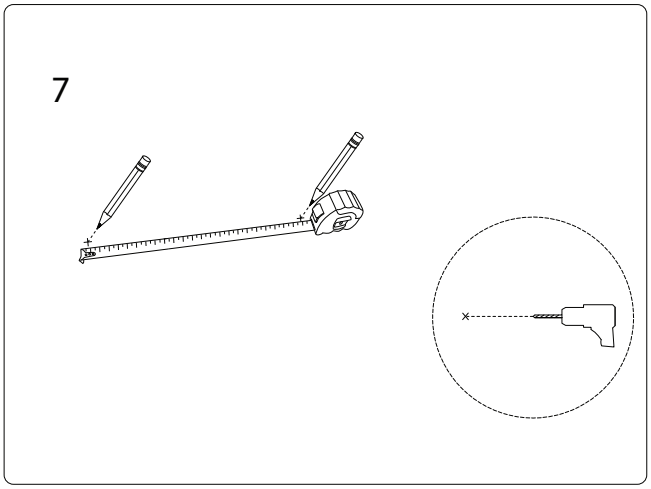

8

E	F
	
x 2	x 2

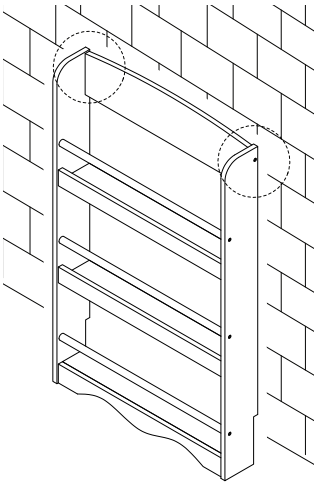

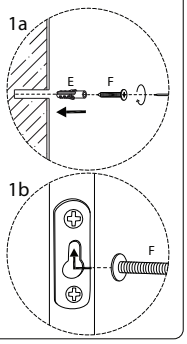

2288/LILOET/301024/