LACKEY

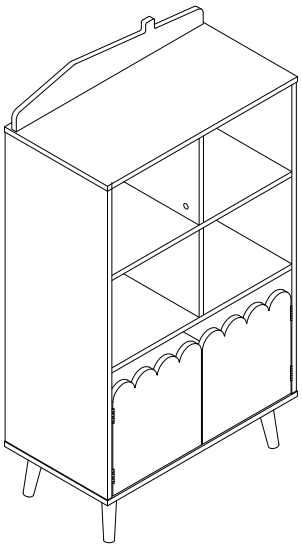

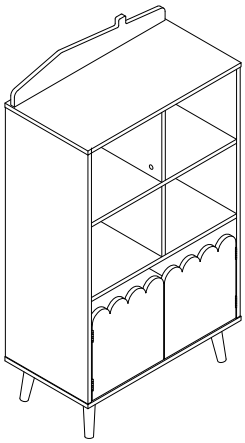

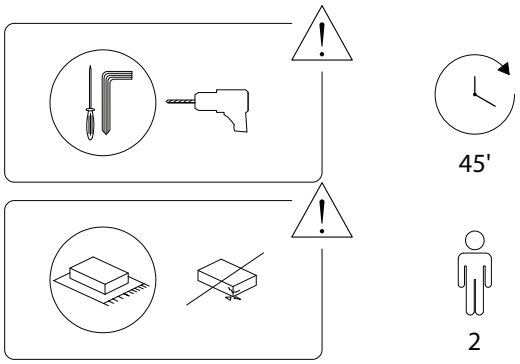
45'
2

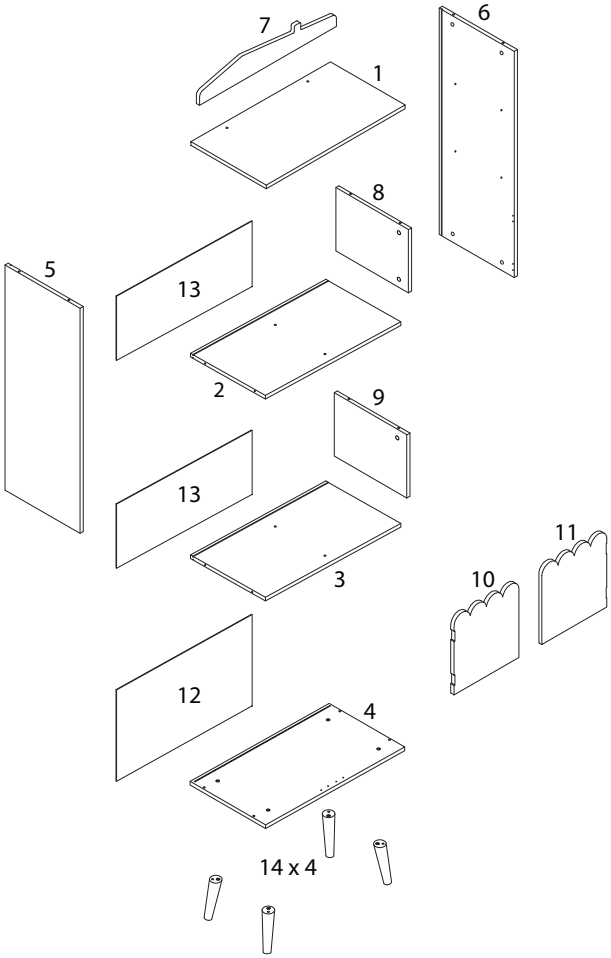
7
1
6
8
5
13
2
9
13
3
11
10
12
4
14 x 4

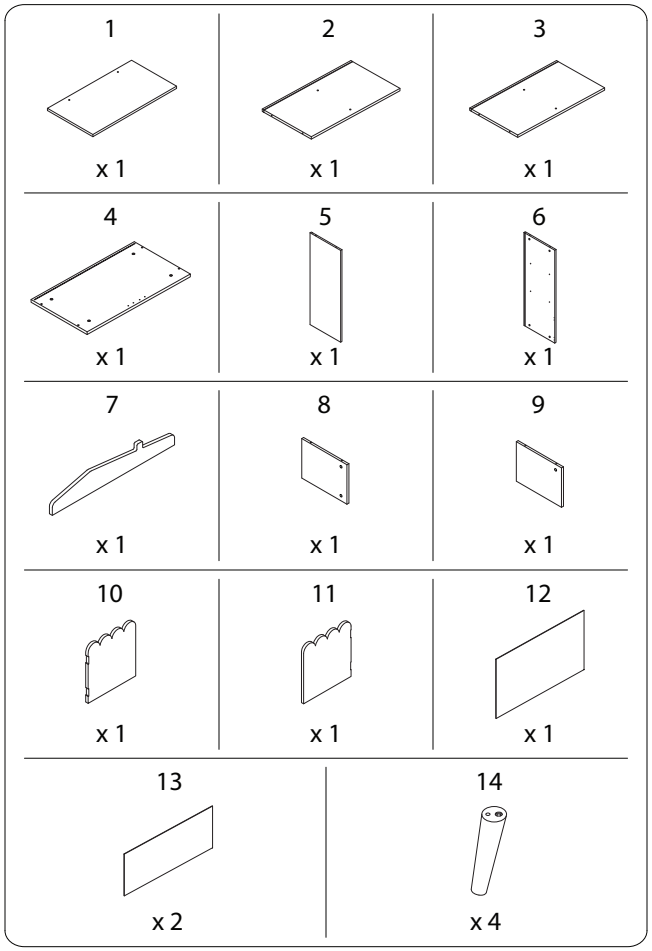
1
x 1
2
x 1
3
x 1
4
x 1
5
x 1
6
x 1
7
x 1
8
x 1
9
x 1
10
x 1
11
x 1
12
x 1
13
x 2
14
x 4

A	B	C
x 21	x 21	x 7
D M6 x 25 x 4	E x 4	F M3 x 8 x 20
G x 2	H x 2	I M3 x 14 x 4
J x 12	K M3 x 12 x 13	L x 2	M x 1
N x 1	O M4 x 35 x 1	P M4 x 35 x 2	Q x 1

1

1	4	5	6	A
x 1	x 1	x 1	x 1	x 17

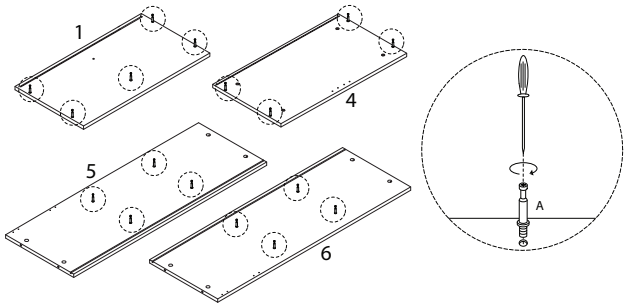

2

G	I	Q
x 2	M4 x 15 x 4	x 1

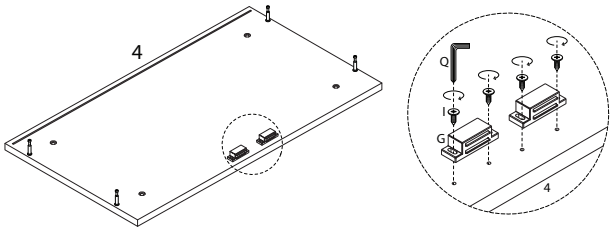

3

10	11	E	F	H	Q
x 1	x 1	x 4	M3 x 8 x 12	x 2	x 1

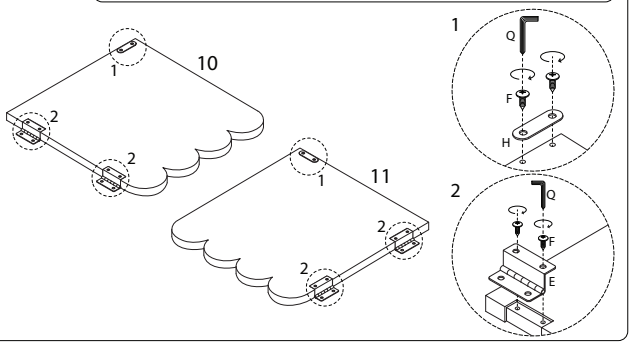

4

2	A	C
x 1	x 2	x 2

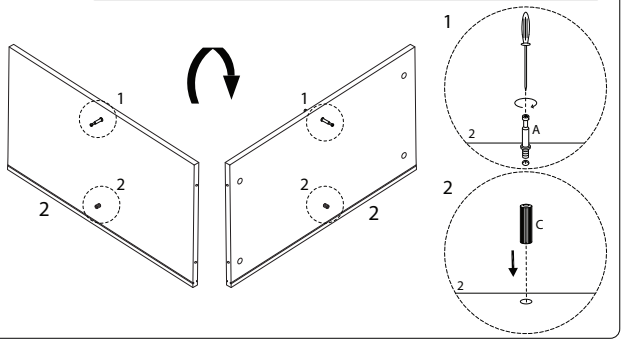

5

8	9	B
x 1	x 1	x 2

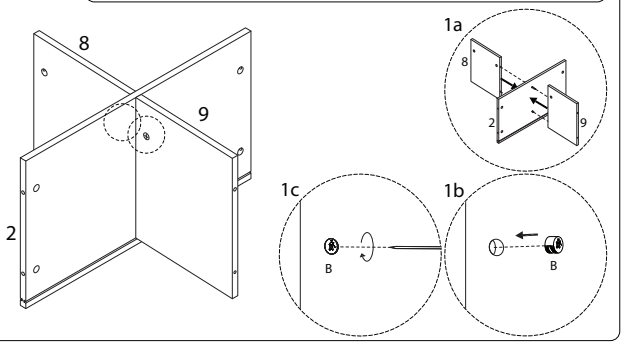

6

3	P	Q
x 1	M4 x 35 x 2	x 1

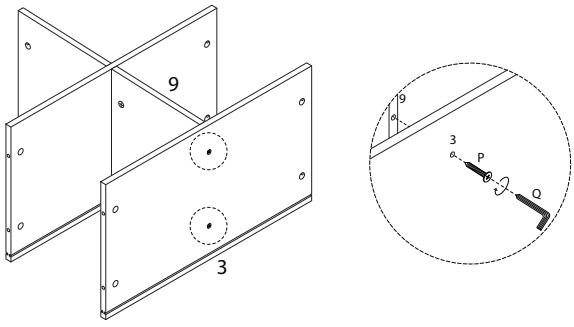

7

B

x 4

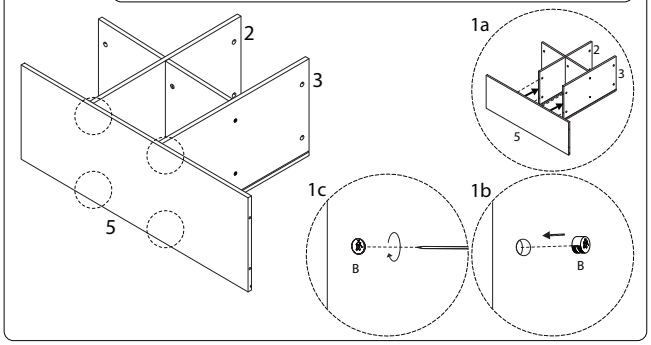

8

13

x 1

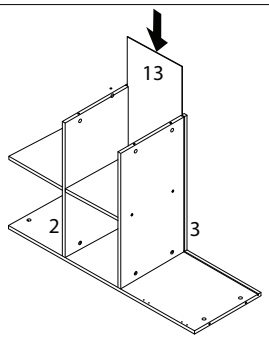

9

B

x 4

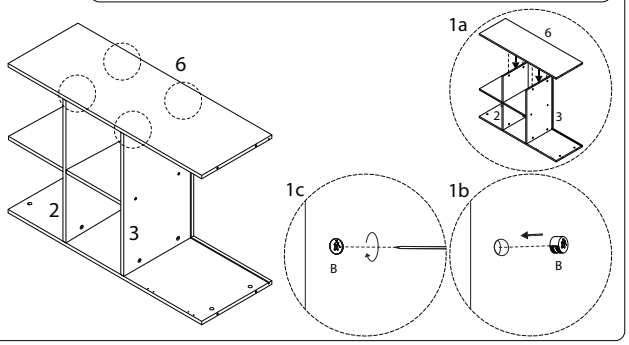

10

13

x 1

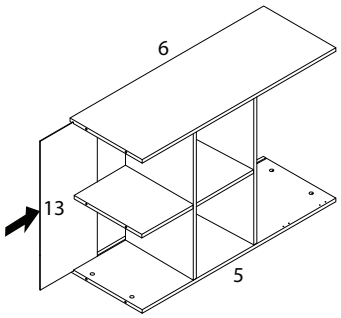

11

C

x 1

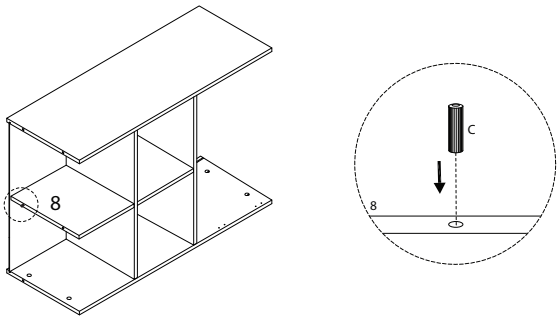

12

B

x 5

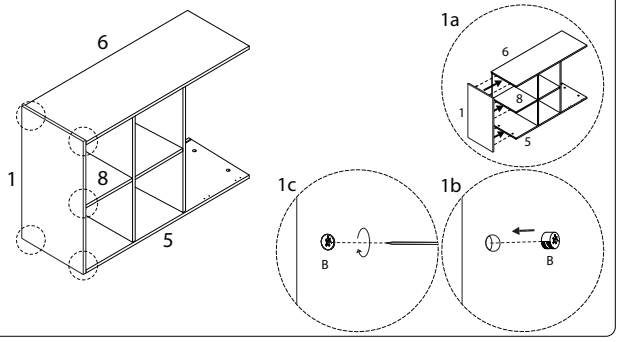

13

12

x 1

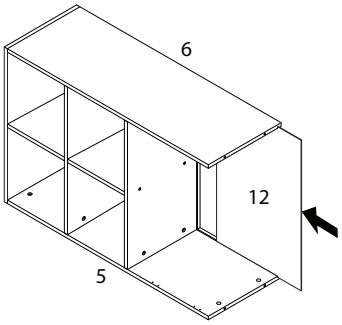

14 x 4

14

x 1

C

x 1

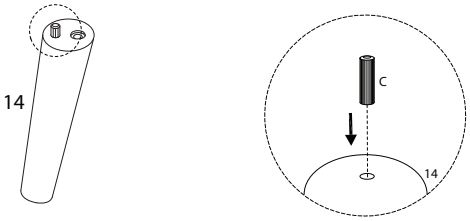

15

D	Q
M6 x 25	
x 4	x 1

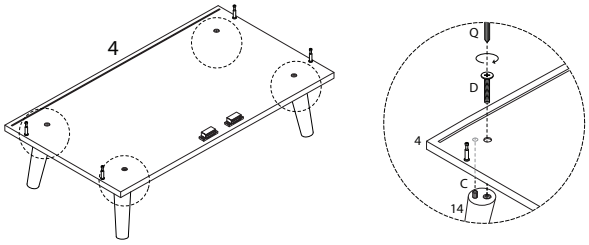

16

B
x 4

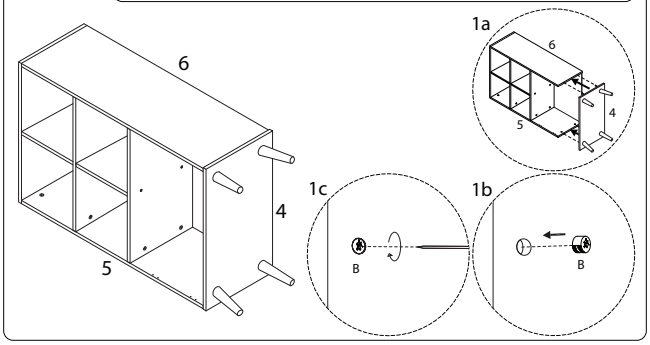

17

A
x 2

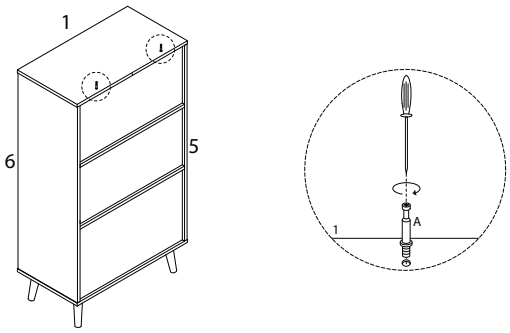

18

7	B
x 1	x 2

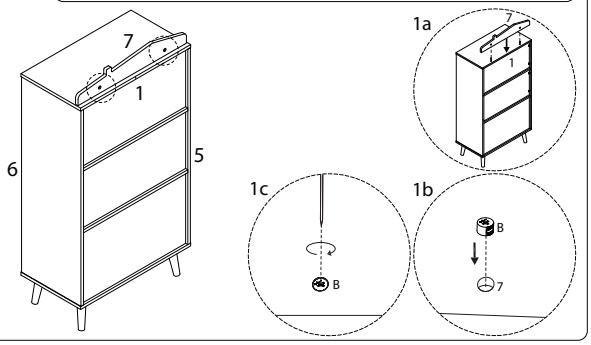

19

J	K
x 12	M3 x 12 x 12

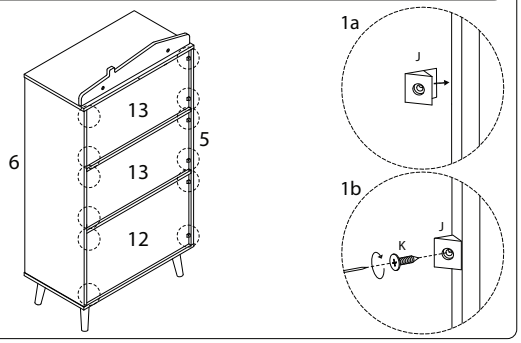

20

F	Q
M3 x 8	
x 8	x 1

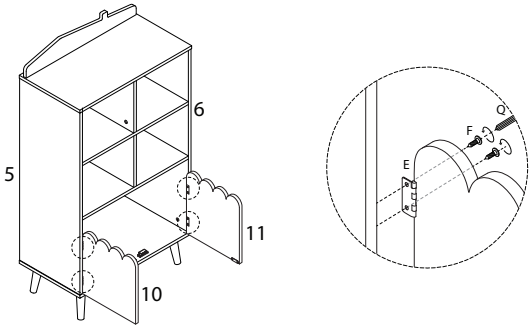

21

K	L	M
M3 x 12		
x 1	x 1	x 1

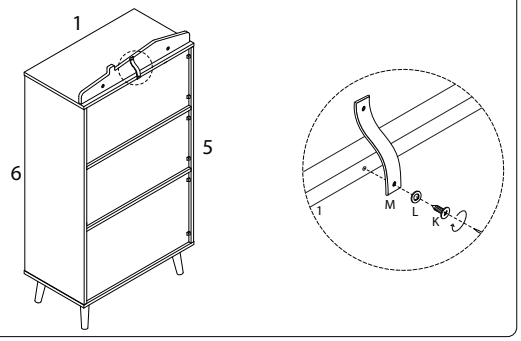

22
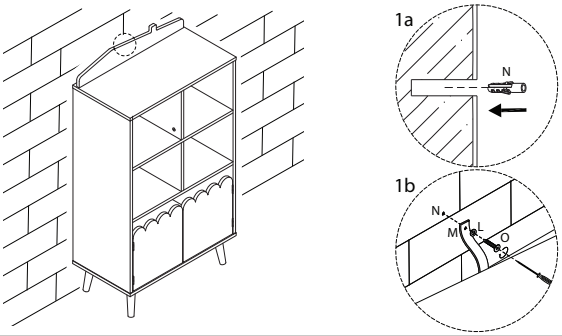
I	N	O
		M4 x 35
x 1	x 1	x 1