# HELLNAR

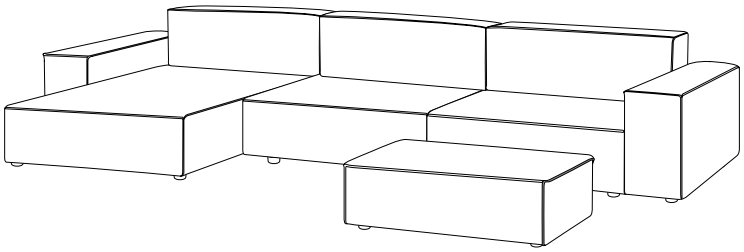

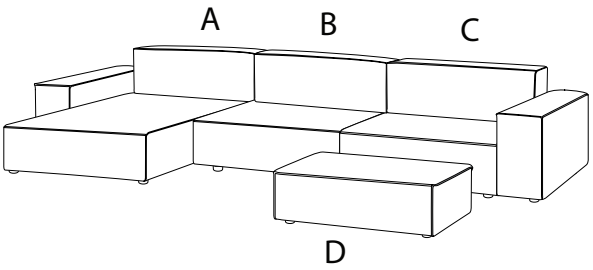
A
B
C
D

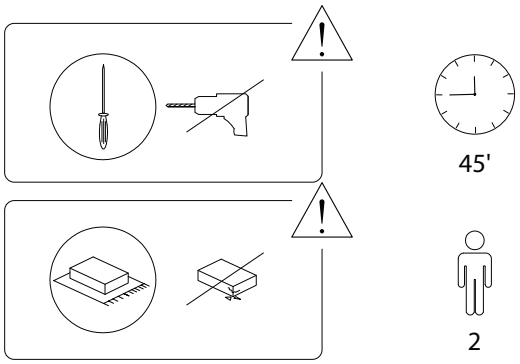
45'
2





A

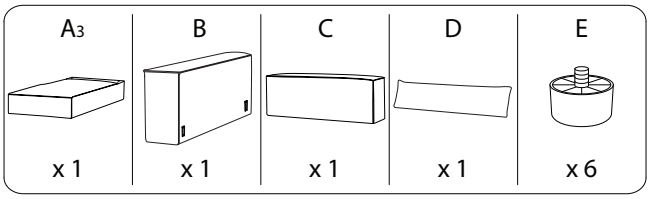
A3
B
C
D
E
x 1
x 1
x 1
x 1
x 6

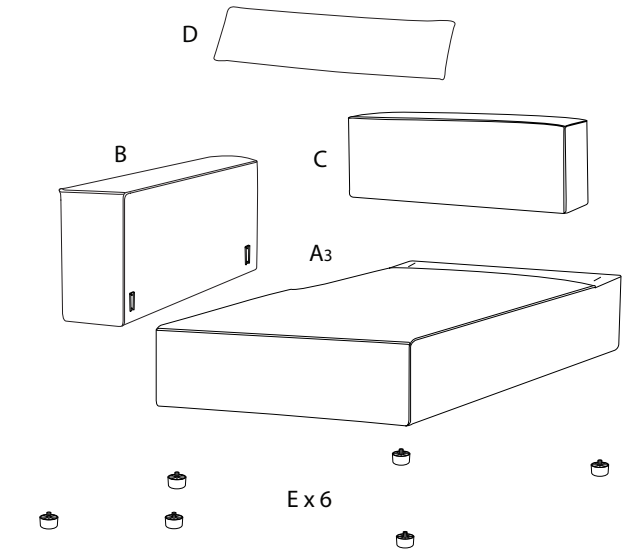
D
B
C
A3
E x 6

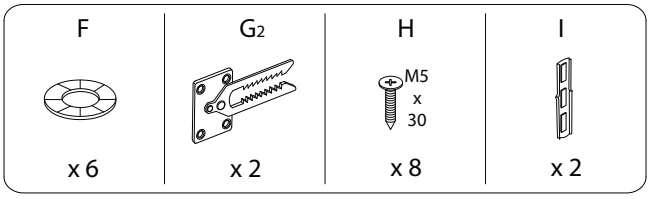
F
G2
H
I
M5
x
30
x 6
x 2
x 8
x 2





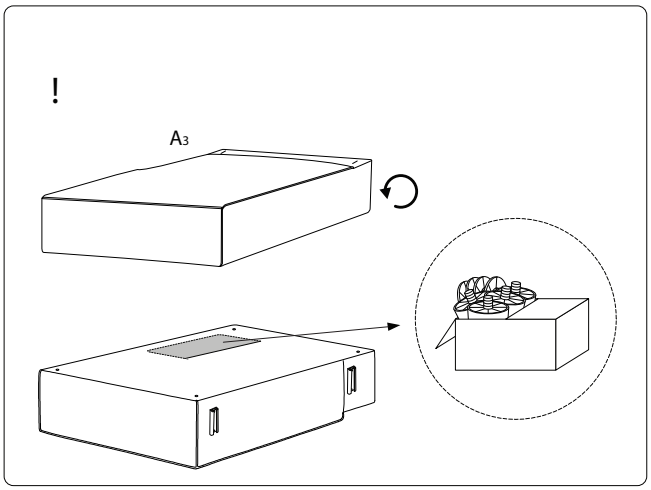
!
A3

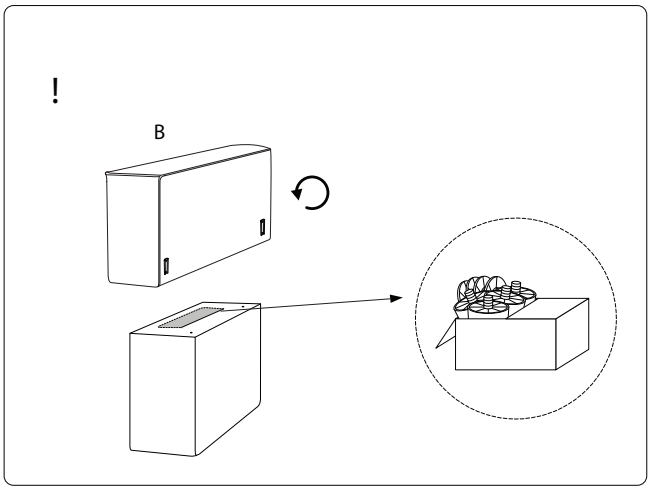
!
B

1

| $A_3$ | E | F |
|---|---|---|
| x 1 | x 4 | x 4 |

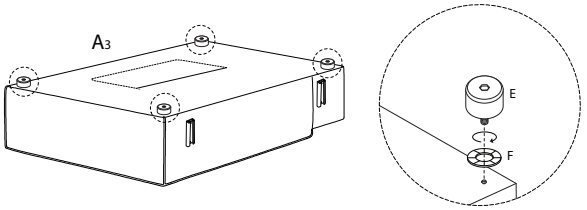





2

| B | E | F |
|---|---|---|
| x 1 | x 2 | x 2 |

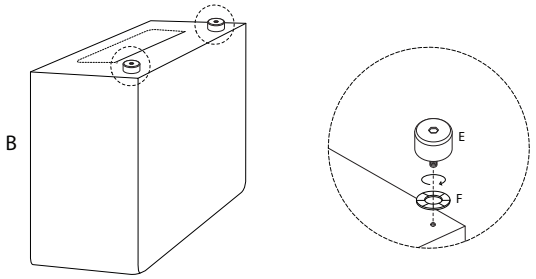







1129/HELLNAR/220424/

3

| $G_2$ | H |
|---|---|
| x 2 | x 8 |

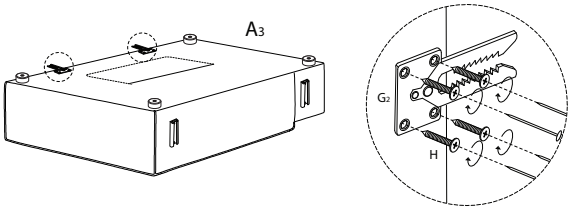





4

| C | I |
|---|---|
| x 1 | x 2 |

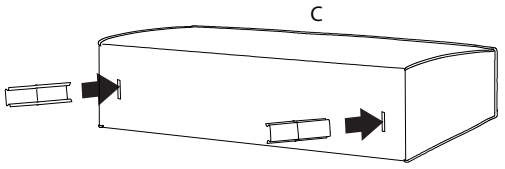




1129/HELLNAR/220424/

5

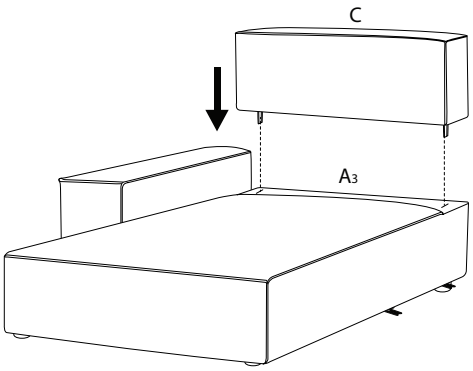


6

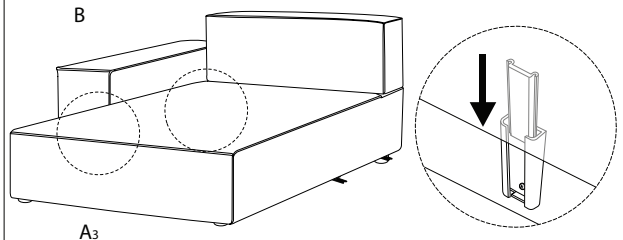




1129/HELLNAR/220424/

7

| D |
|---|
| x 1 |

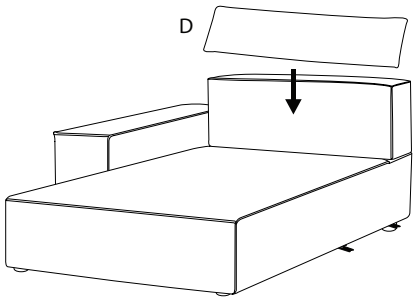




1129/HELLNAR/220424/

B

| A2 | C | D | E |
|---|---|---|---|
| x 1 | x 1 | x 1 | x 4 |

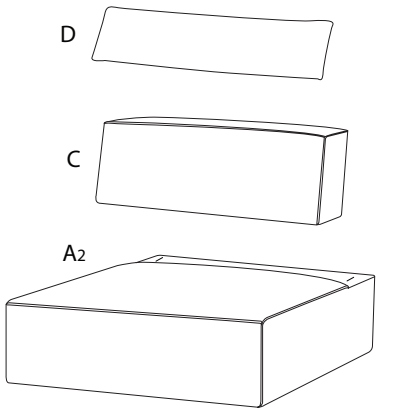


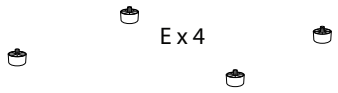


| F | G1 | G2 | H | I |
|---|---|---|---|---|
| x 4 | x 2 | x 2 | M5 x 30 x 18 | x 2 |



1129/HELLNAR/220424/

!

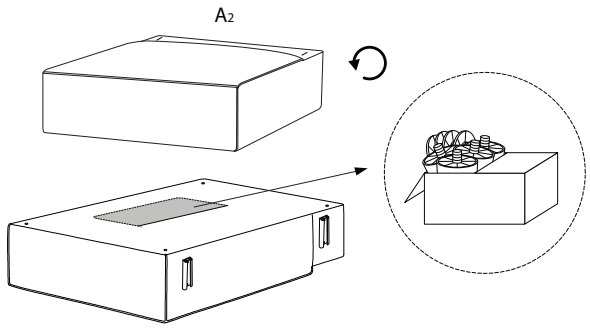


1

| A2 | E | F |
|---|---|---|
| x 1 | x 4 | x 4 |

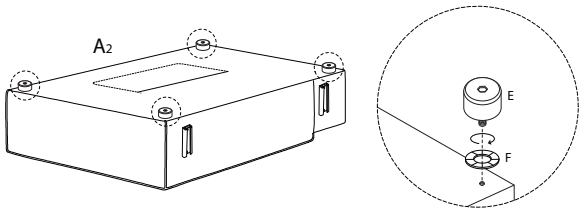




1129/HELLNAR/220424/

2

| G1 | G2 | H |
|---|---|---|
| x 2 | x 2 | M5 x 30 x 18 |

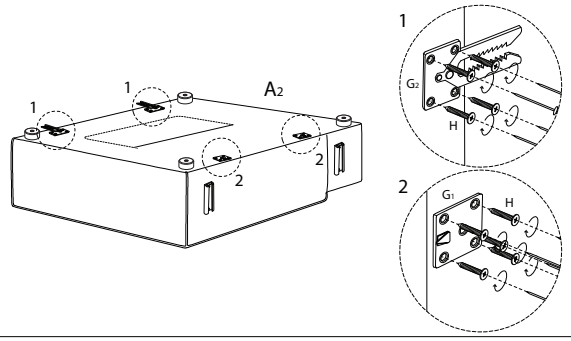


4

| C | I |
|---|---|
| x 1 | x 2 |

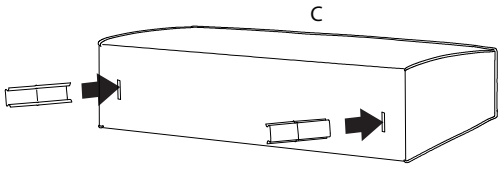


3

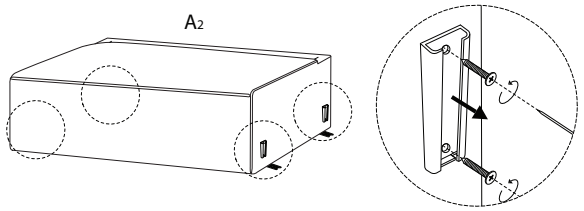




1129/HELLNAR/220424/

5

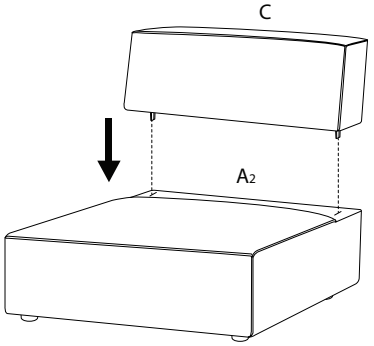




1129/HELLNAR/220424/

6

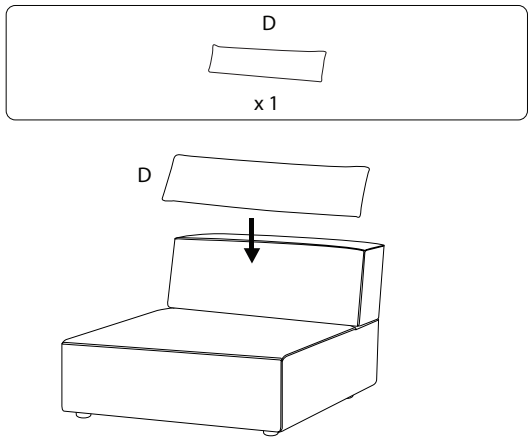
D
x 1
D





C

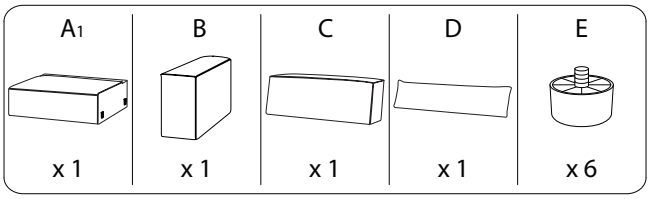
A1
B
C
D
E
x 1
x 1
x 1
x 1
x 6

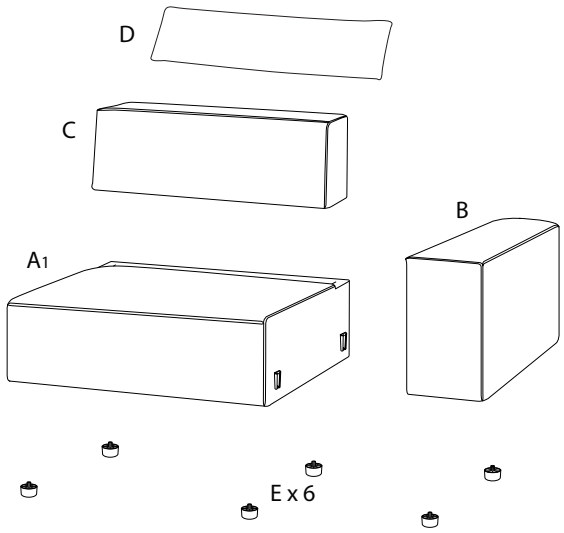
D
C
B
A1
E x 6

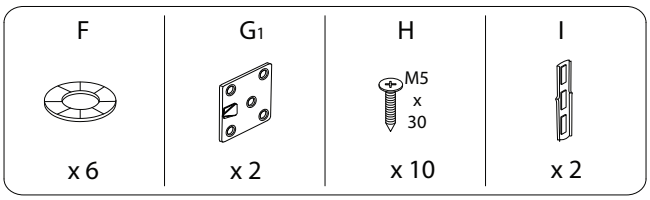
F
G1
H
I
M5
x
30
x 6
x 2
x 10
x 2





!

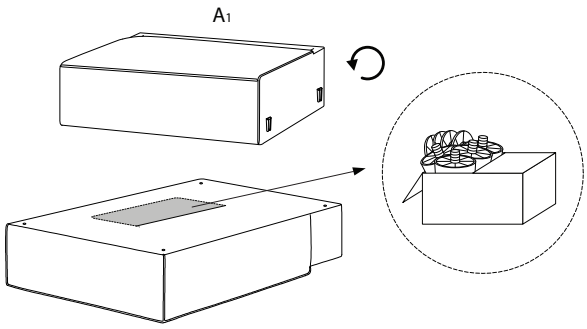
A1

1

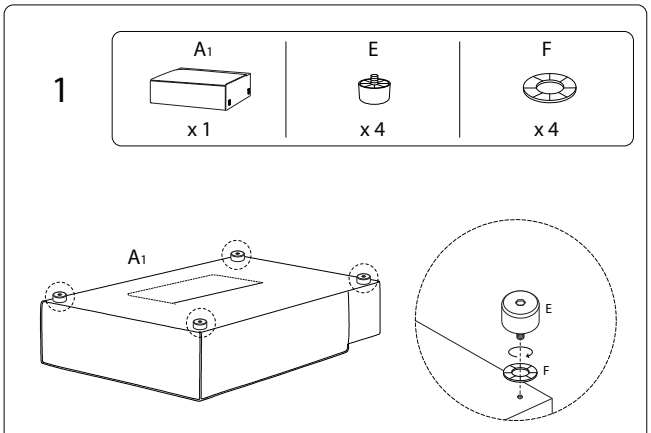
A1
E
F
x 1
x 4
x 4
A1
E
F

!

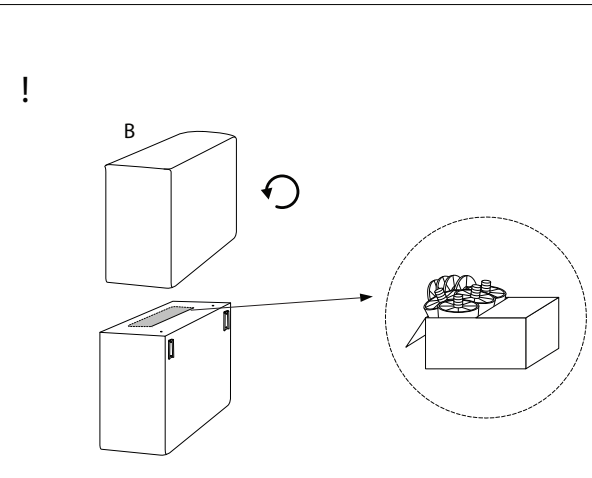
B

2

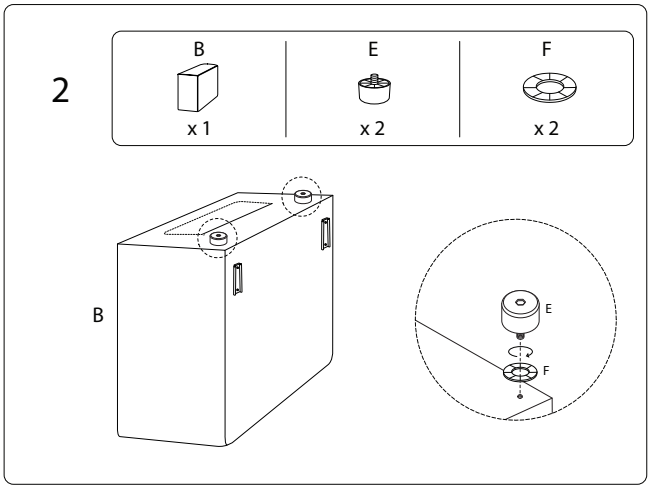
B
E
F
x 1
x 2
x 2
B
E
F

3

| G1 | H |
|---|---|
| x 2 | x 10 |

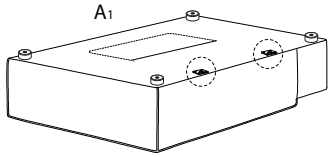


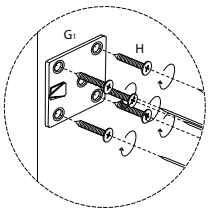


4

| C | I |
|---|---|
| x 1 | x 2 |

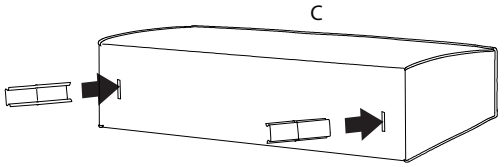






5

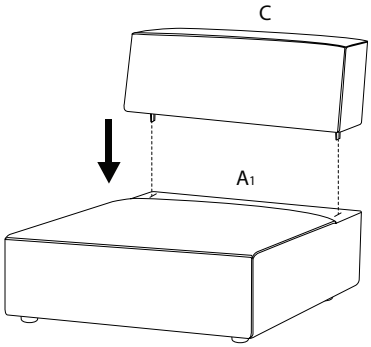


6

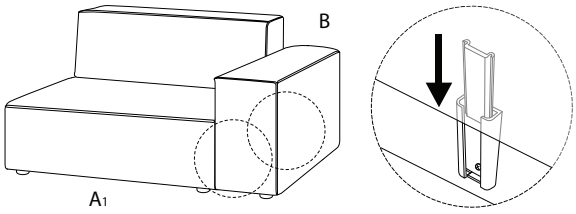






D

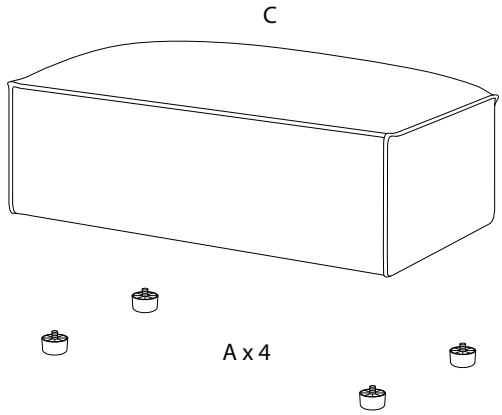


| A | B | C |
|---|---|---|
| x 4 | x 4 | x 1 |





!

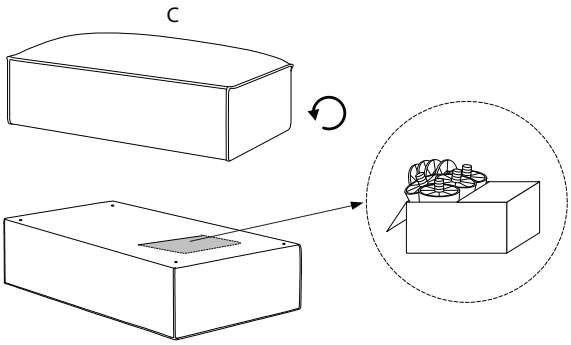


1

| A | B | C |
|---|---|---|
| x 4 | x 4 | x 1 |

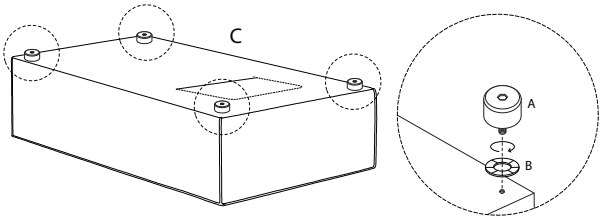

!

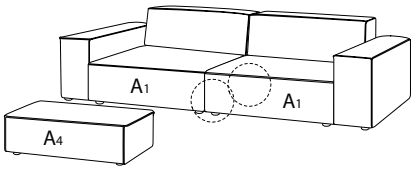


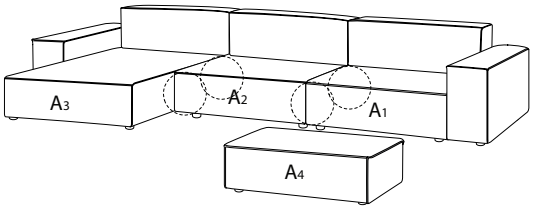


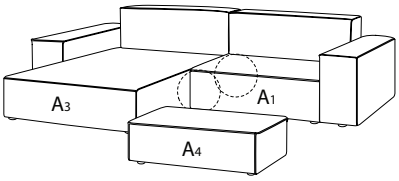


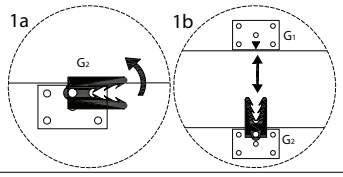




1129/HELLNAR/220424/