SKIEN

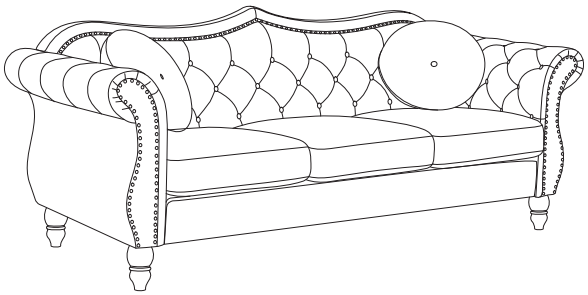

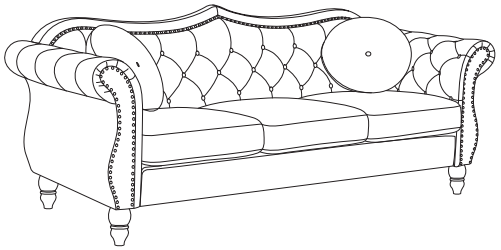

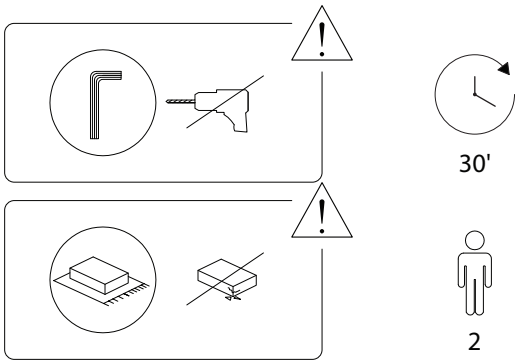

1352/SKIEN/301225/

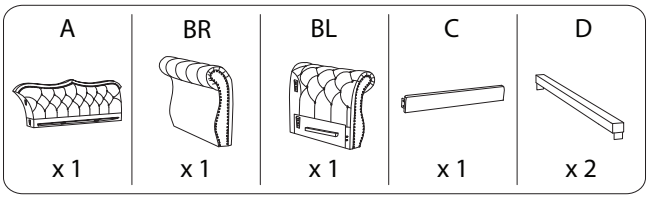

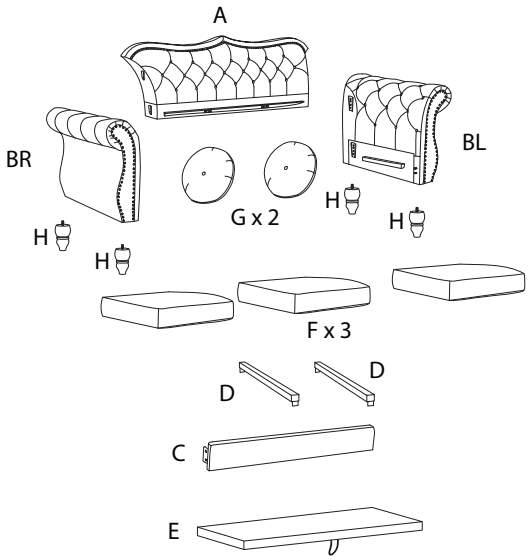

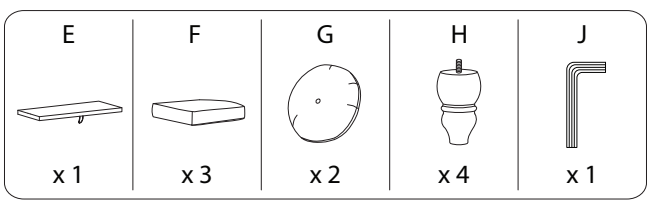

1352/SKIEN/301225/

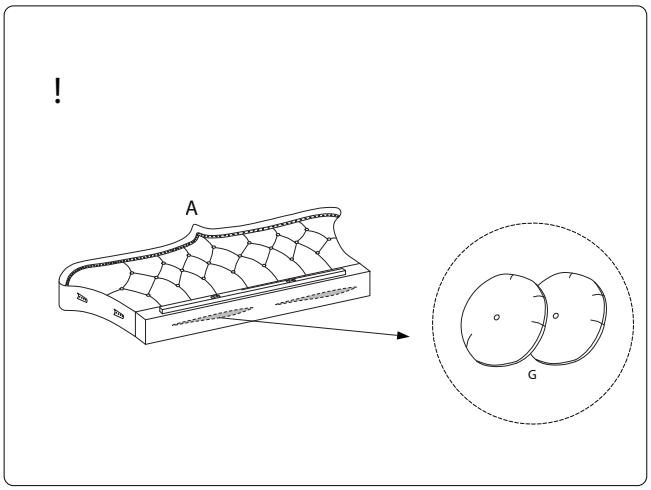

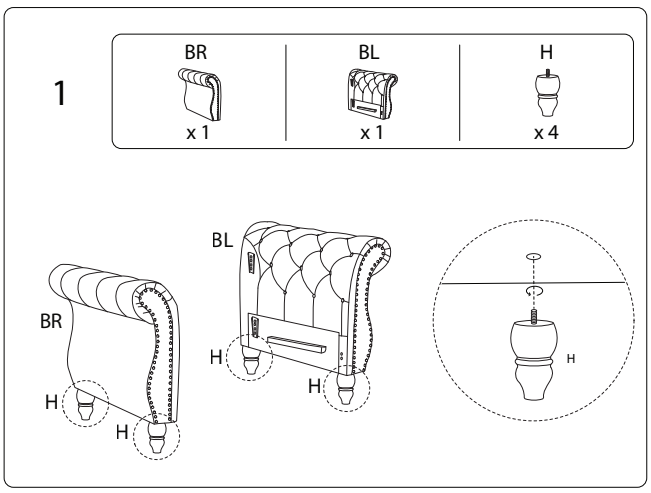

1352/SKIEN/301225/

2

A

x 1

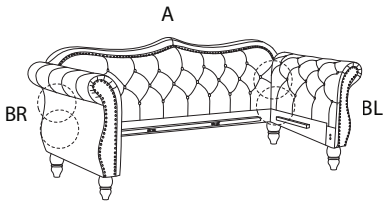

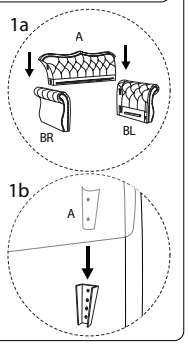

3

C

x 1

J

x 1

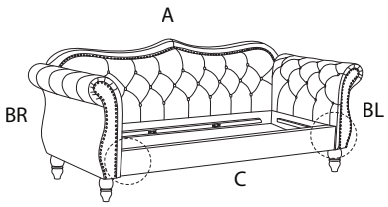

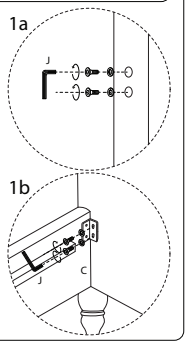

5/7

1352/SKIEN/301225/

4

D

x 2

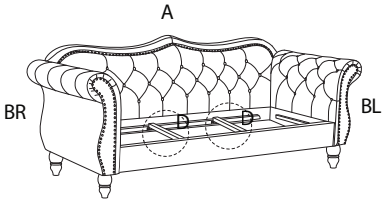

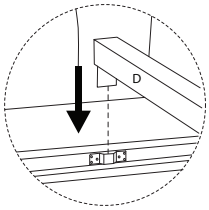

5

E

x 1

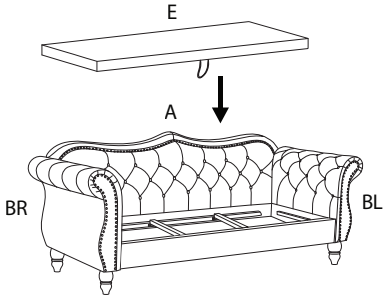

6/7

1352/SKIEN/301225/

6

F

x 2

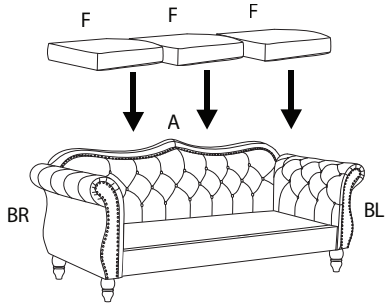

7/7

1352/SKIEN/301225/