BELOEIL

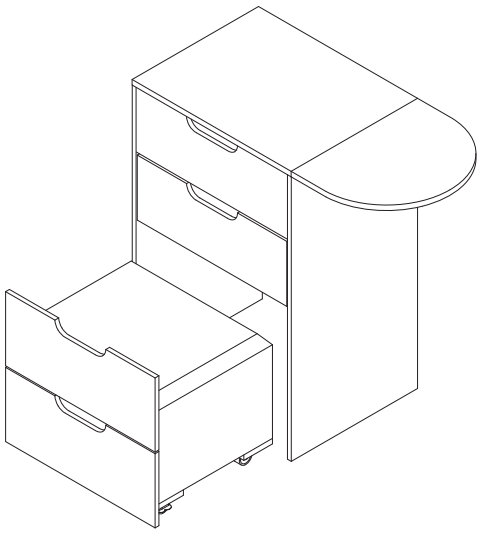

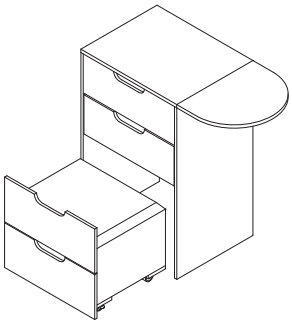

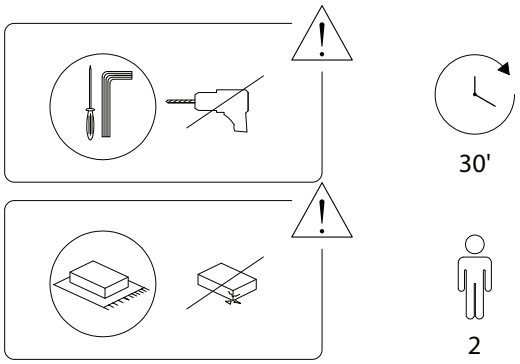
30'
2

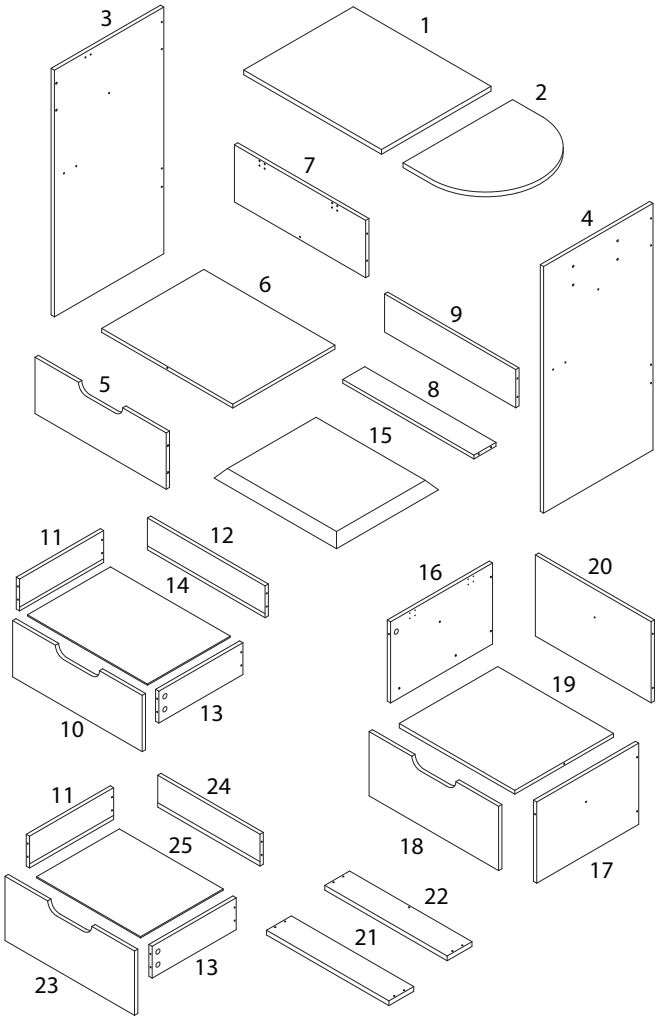
3
1
2
7
4
6
9
5
8
15
11
12
14
16
20
10
13
19
11
24
25
18
17
22
21
13
23

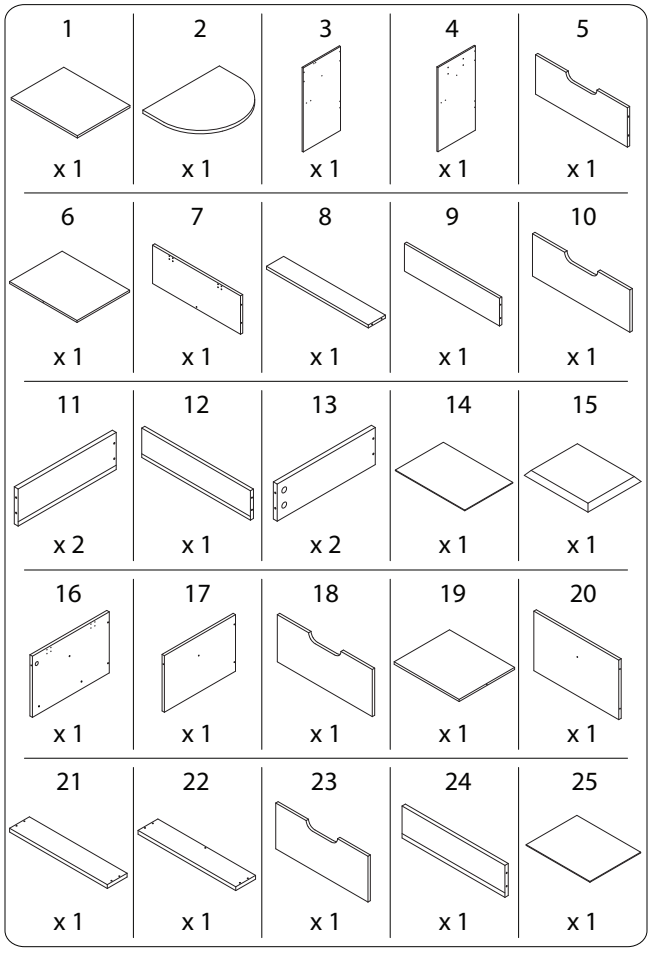
1 x 1
2 x 1
3 x 1
4 x 1
5 x 1
6 x 1
7 x 1
8 x 1
9 x 1
10 x 1
11 x 2
12 x 1
13 x 2
14 x 1
15 x 1
16 x 1
17 x 1
18 x 1
19 x 1
20 x 1
21 x 1
22 x 1
23 x 1
24 x 1
25 x 1

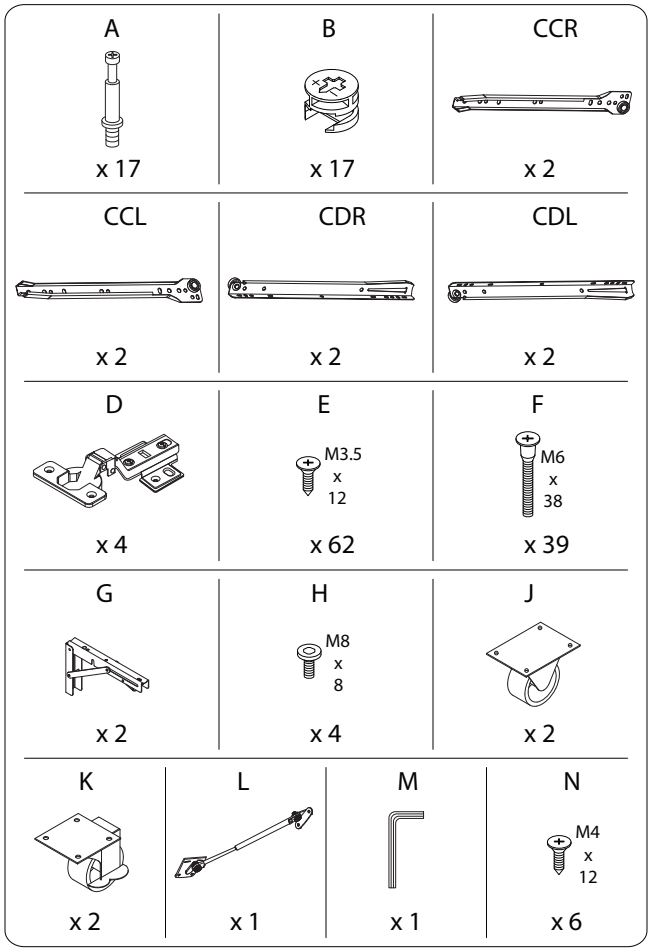
A
x 17
B
x 17
CCR
x 2
CCL
x 2
CDR
x 2
CDL
x 2
D
x 4
E
M3.5 x 12
x 62
F
M6 x 38
x 39
G
x 2
H
M8 x 8
x 4
J
x 2
K
x 2
L
x 1
M
x 1
N
M4 x 12
x 6

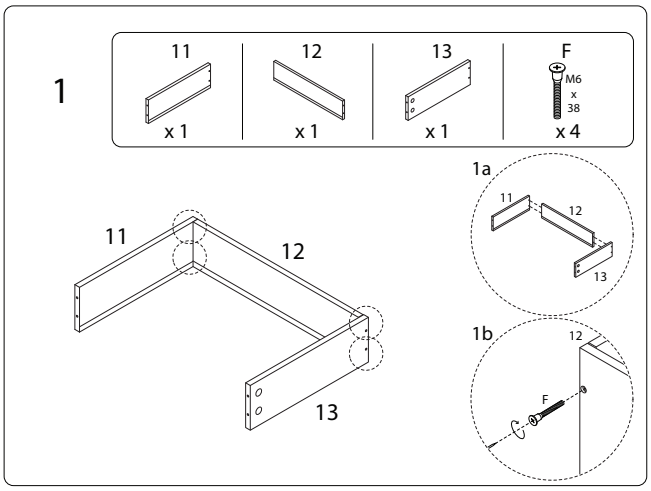
1
11
x 1
12
x 1
13
x 1
F
M6 x 38
x 4
1a
11
12
13
1b
12
F
11
12
13

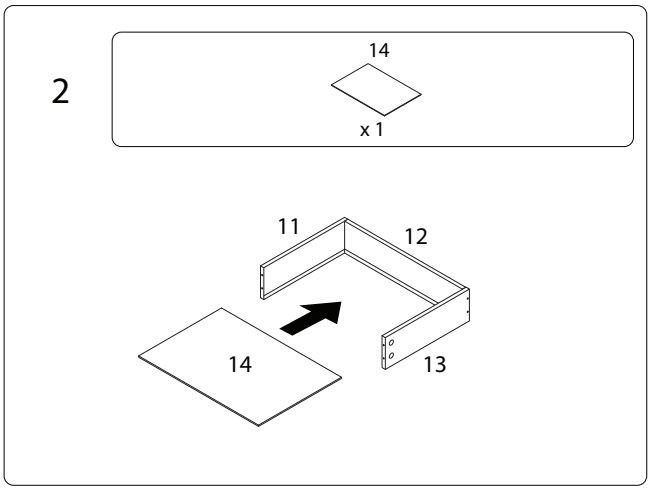
2
14
x 1
11
12
14
13

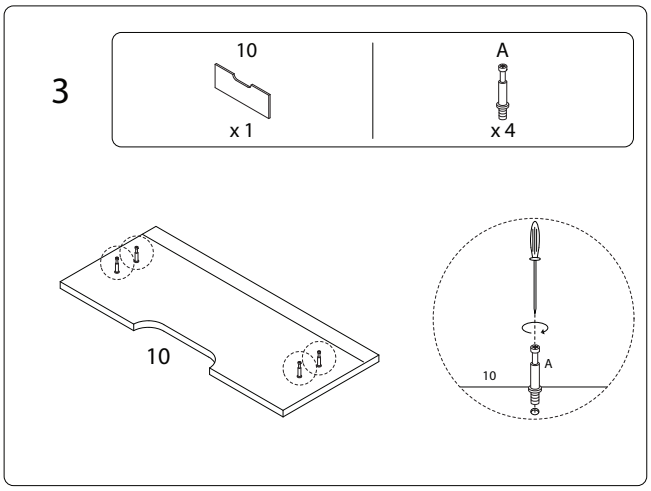
3
10
x 1
A
x 4
10
10
A

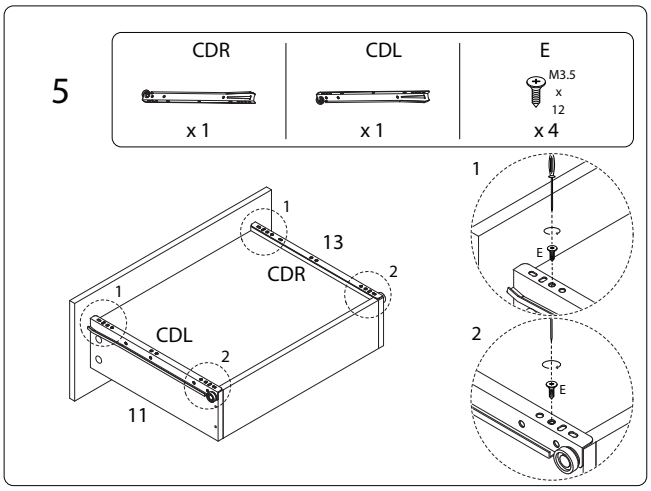
5
CDR
x 1
CDL
x 1
E
M3.5 x 12
x 4
1
13
CDR
2
1
CDL
2
11
1
E
2
E

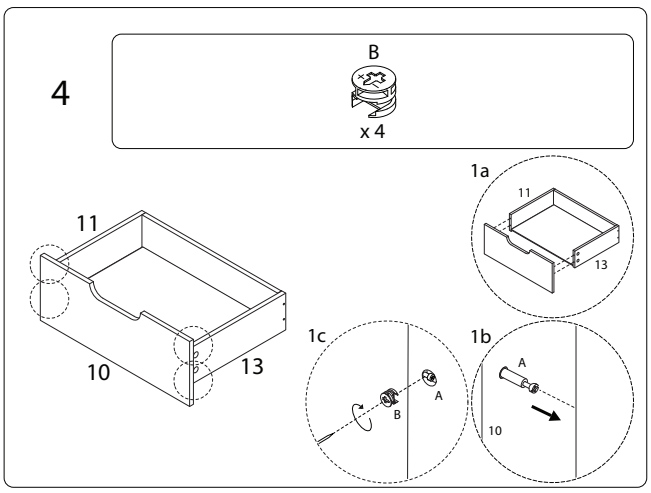
4
B
x 4
11
10
13
1a
11
13
1c
B
A
1b
A
10

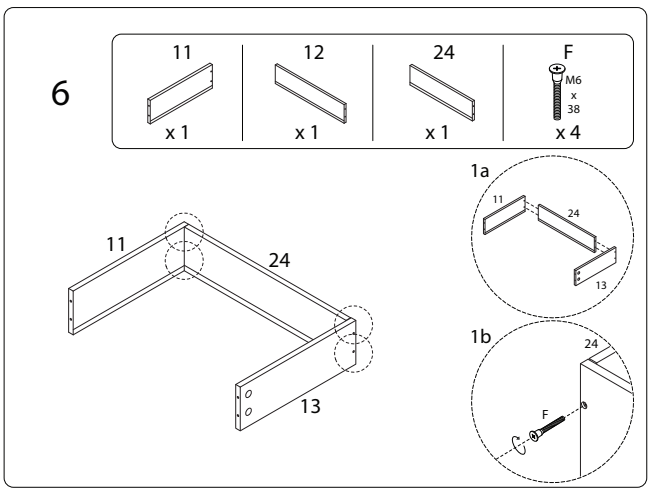
6
11
x 1
12
x 1
24
x 1
F
M6 x 38
x 4
1a
11
24
13
1b
24
F
11
24
13

7

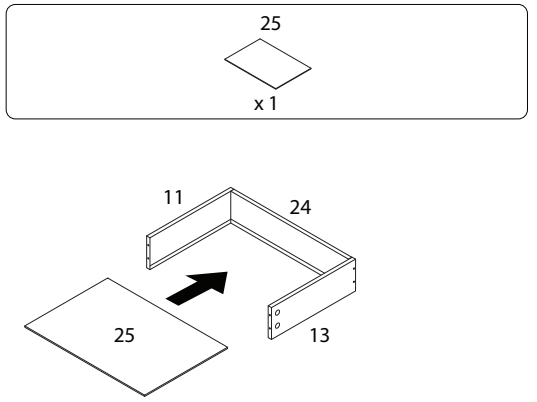

8

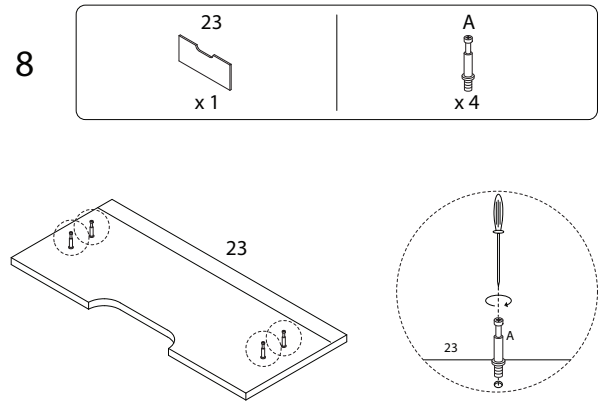

9

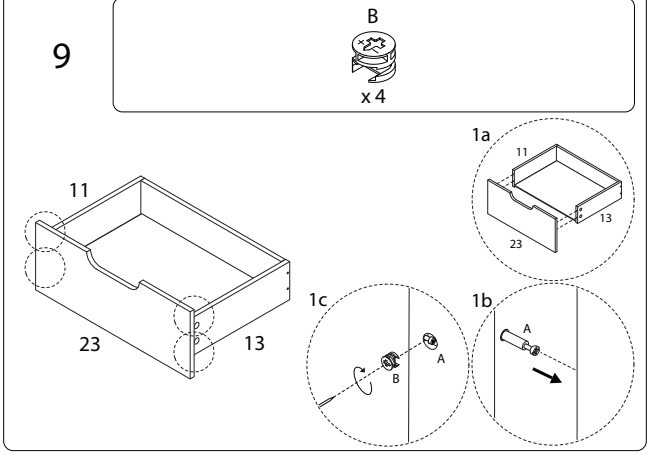

10

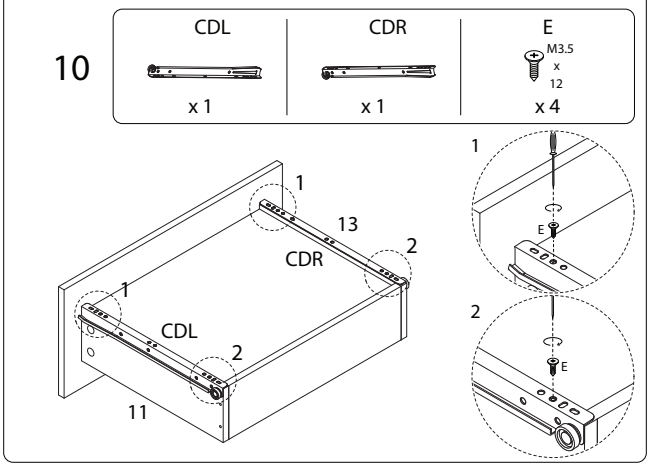

11

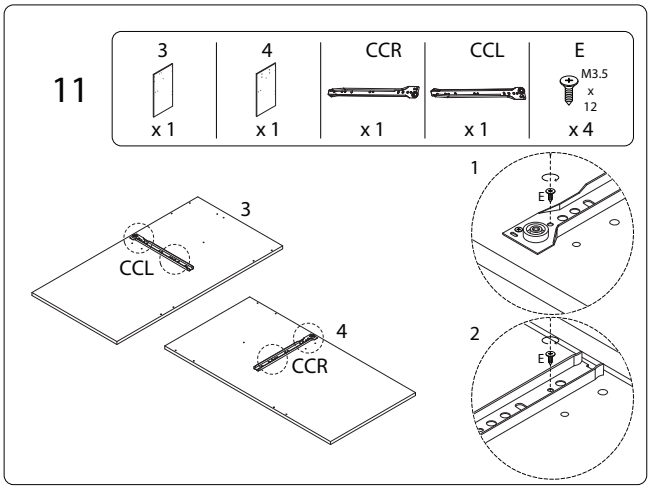

12

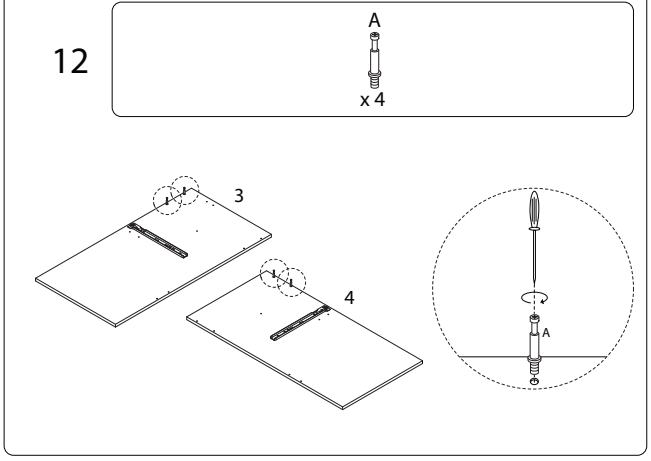

13

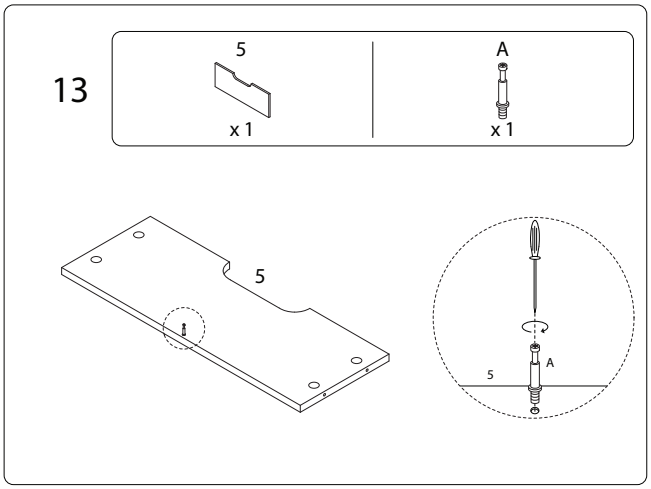

14

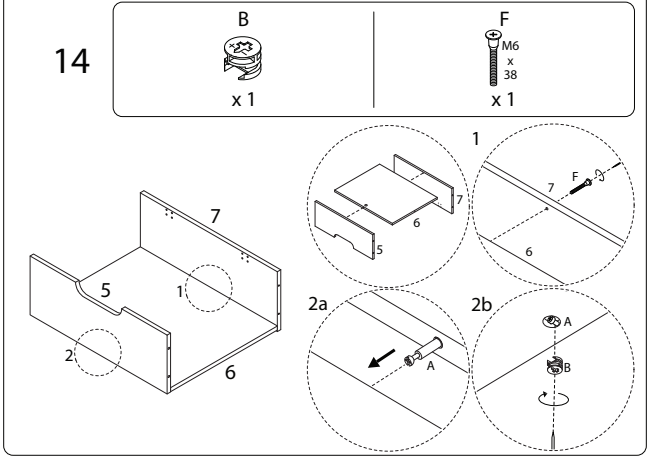

15

8	9	B	F
x 1	x 1	x 2	M6 x 38 x 7

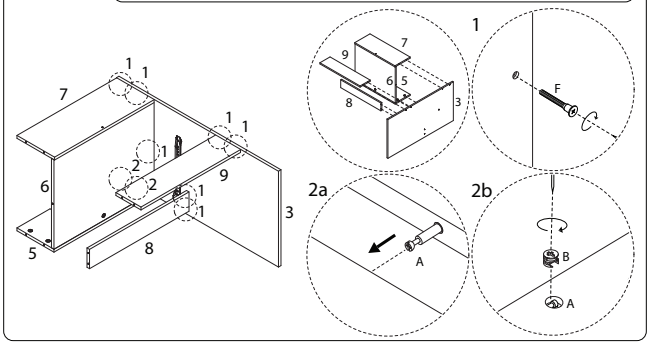

16

B	F
x 2	M6 x 38 x 7

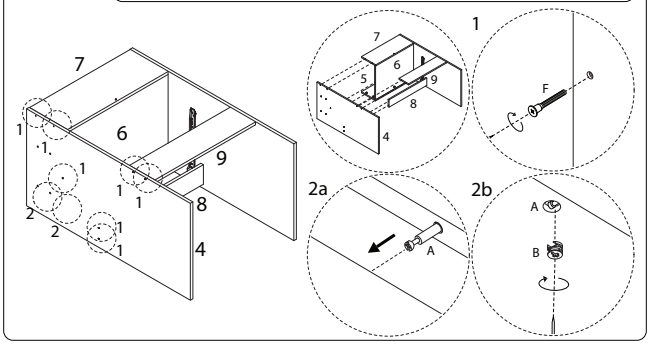

17

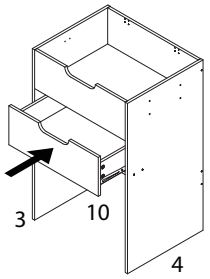

18

G	H	M
x 2	M8 x 8 x 4	x 1

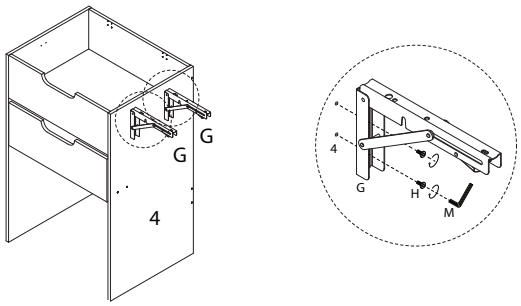

19

2	N
x 1	M4 x 12 x 6

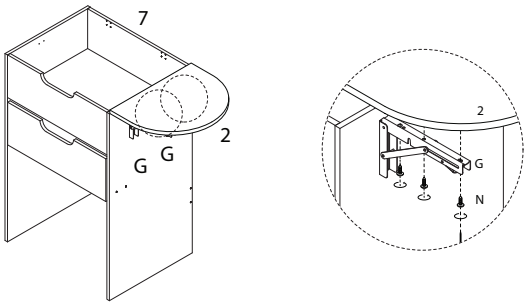

20

1	D	E
x 1	x 2	M3.5 x 12 x 4

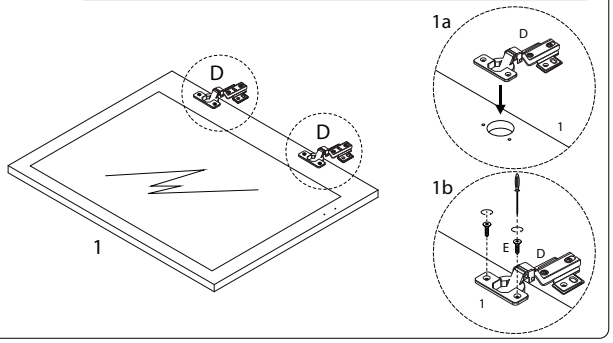

21

E
M3.5 x 12 x 8

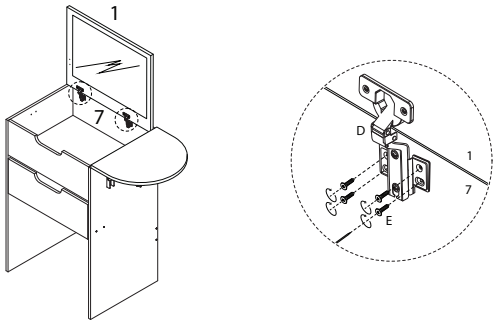

22

L	E
x 1	M3.5 x 12 x 6

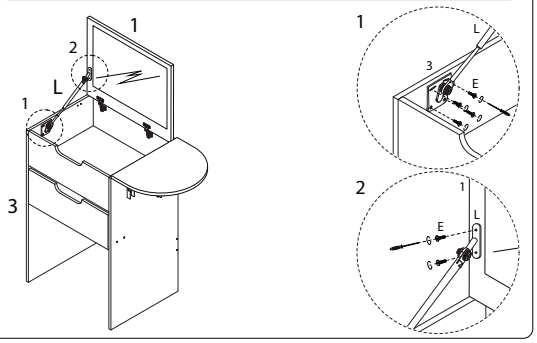

23

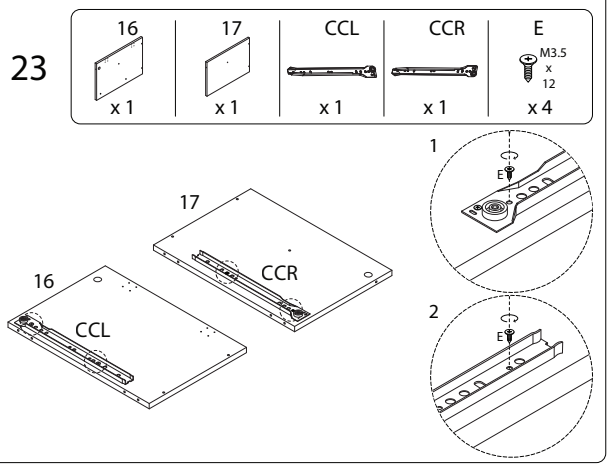

24

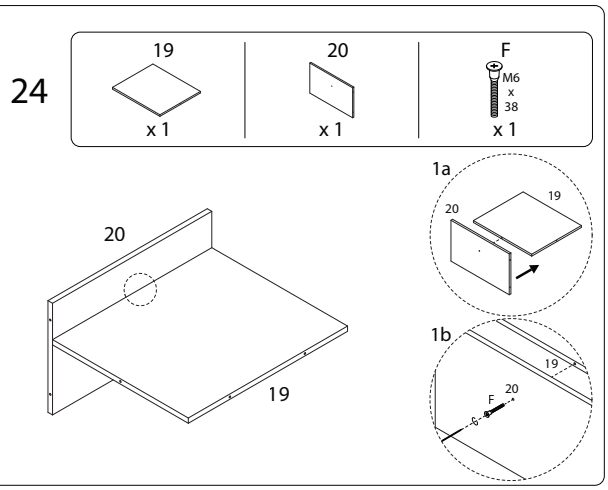

25

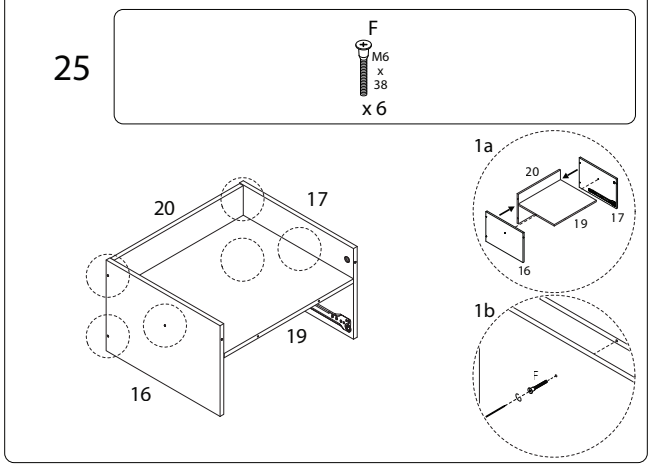

26

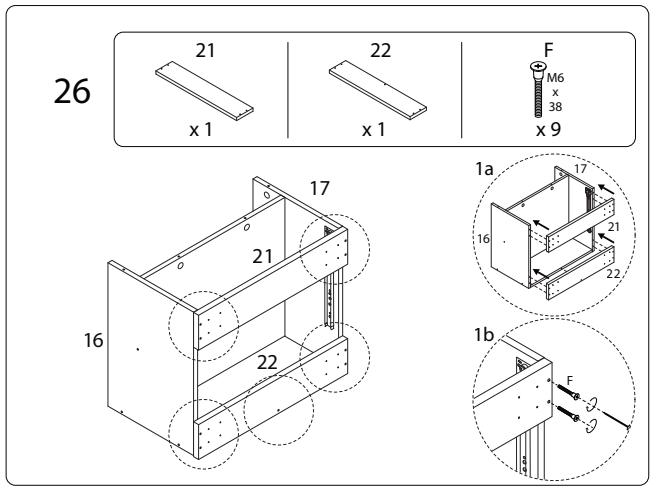

27

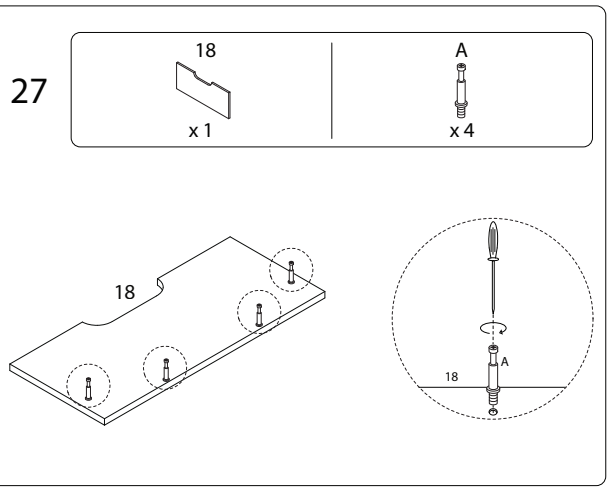

28

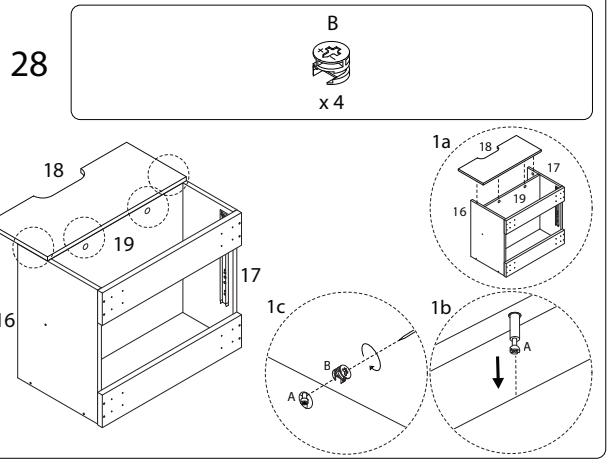

29

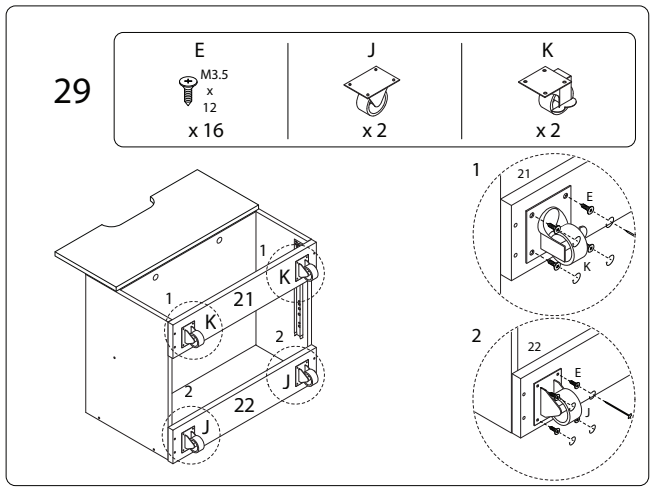

30

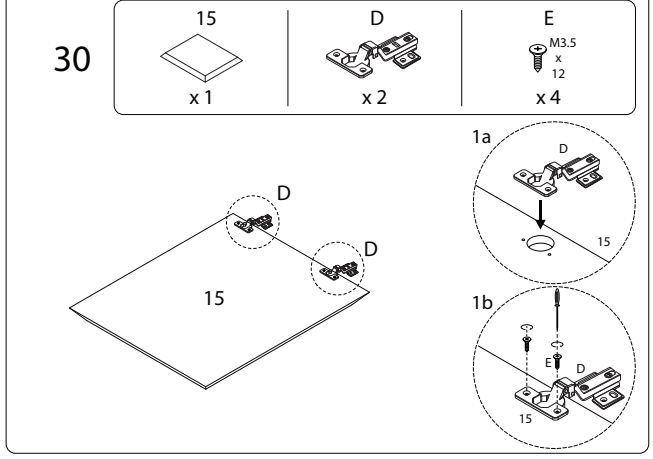

31

E

M3.5 x 12

x 8

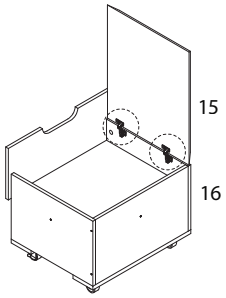

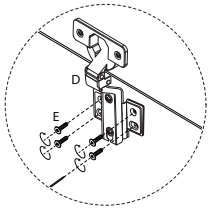

!

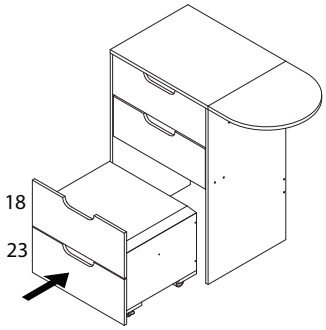

!

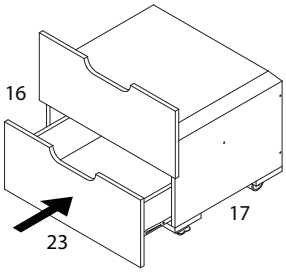
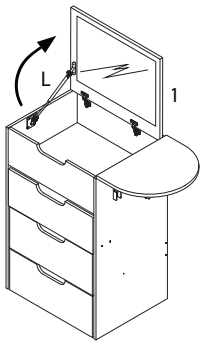
!