SELAH





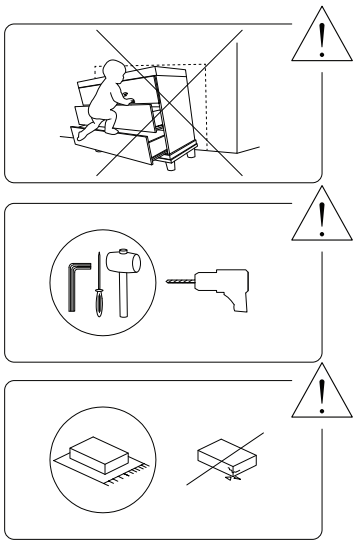

1/12

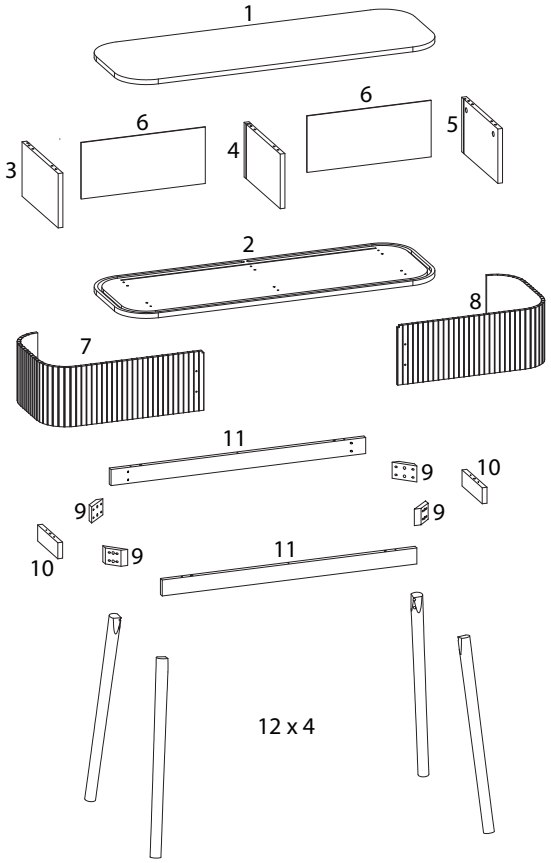

1 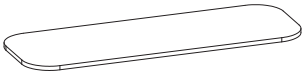 x 1	2 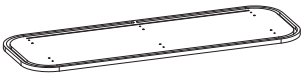 x 1	
3 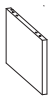 x 1	4 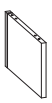 x 1	
5 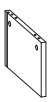 x 1	6  x 2	
7 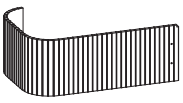 x 1	8 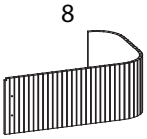 x 1	9  x 4
10  x 2	11  x 2	12  x 4

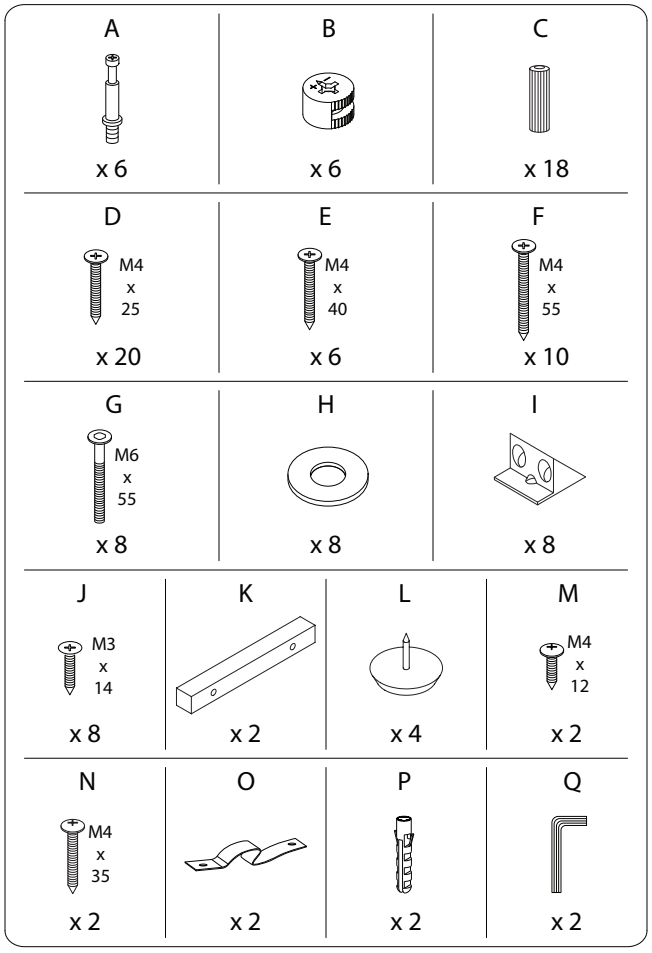
A
x 6
B
x 6
C
x 18
D
M4 x 25
x 20
E
M4 x 40
x 6
F
M4 x 55
x 10
G
M6 x 55
x 8
H
x 8
I
x 8
J
M3 x 14
x 8
K
x 2
L
x 4
M
M4 x 12
x 2
N
M4 x 35
x 2
O
x 2
P
x 2
Q
x 2

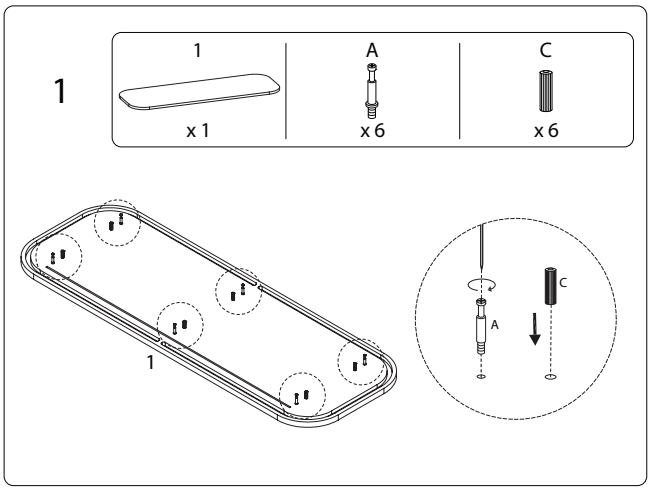
1
1
x 1
A
x 6
C
x 6
1
A
C

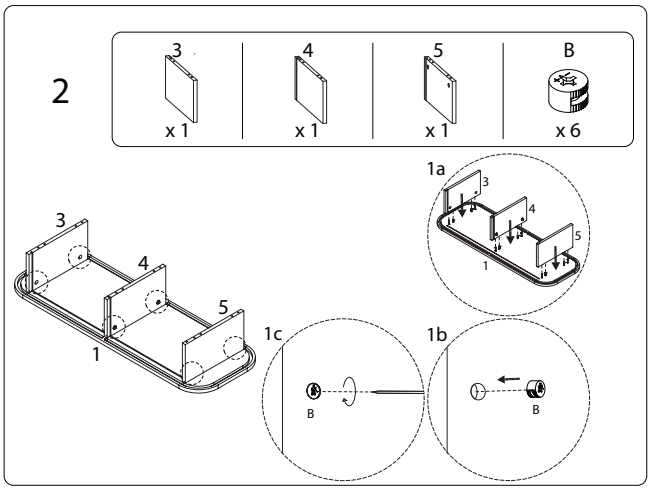
2
3
x 1
4
x 1
5
x 1
B
x 6
1a
3
4
5
1
3
4
5
1
1c
B
1b
B

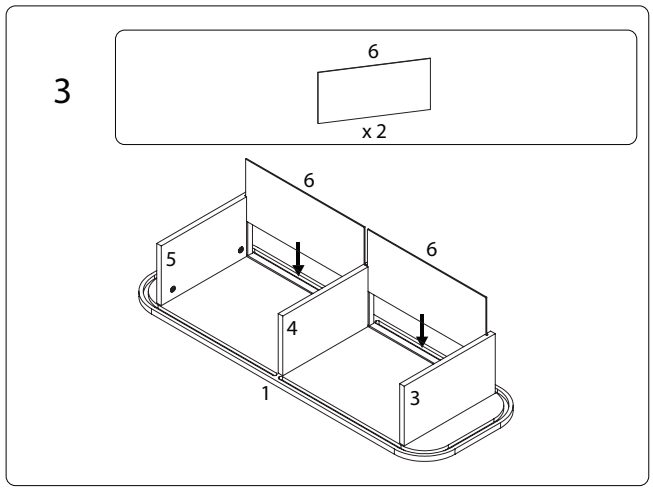
3
6
x 2
6
6
5
4
1
3

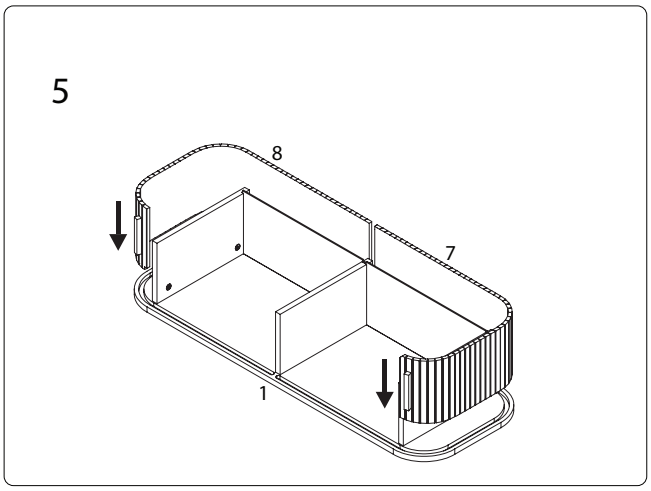
5
8
7
1

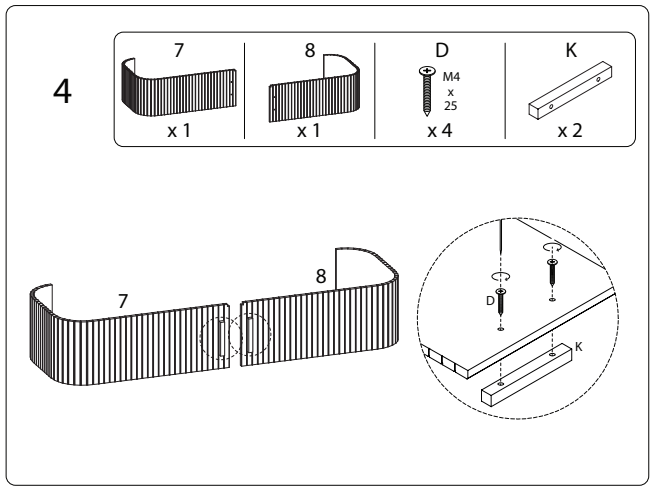
4
7
x 1
8
x 1
D
M4 x 25
x 4
K
x 2
8
7
D
K

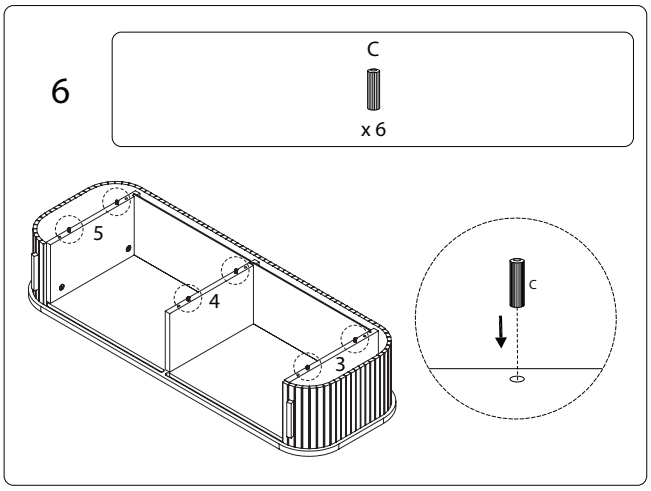
6
C
x 6
5
4
3
C

7

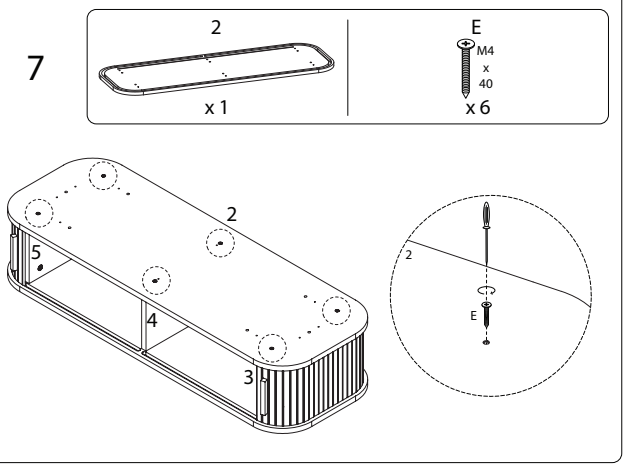

8

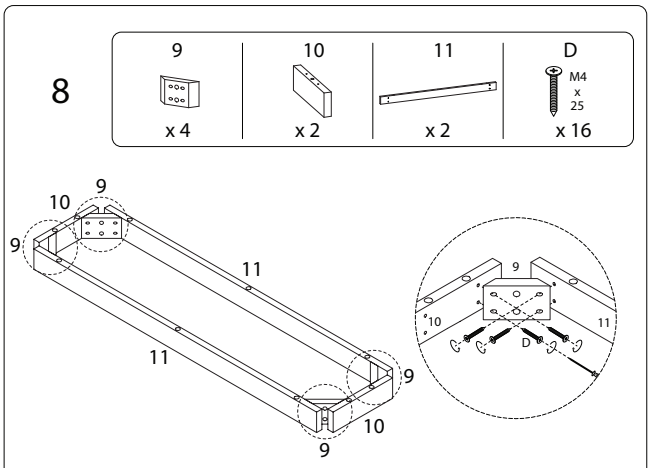

9

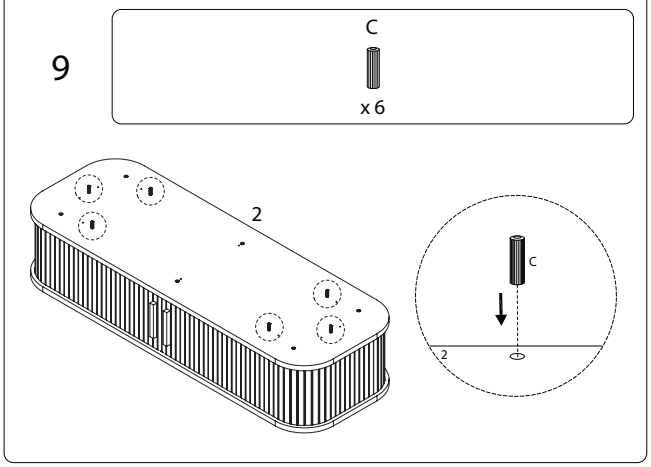

10

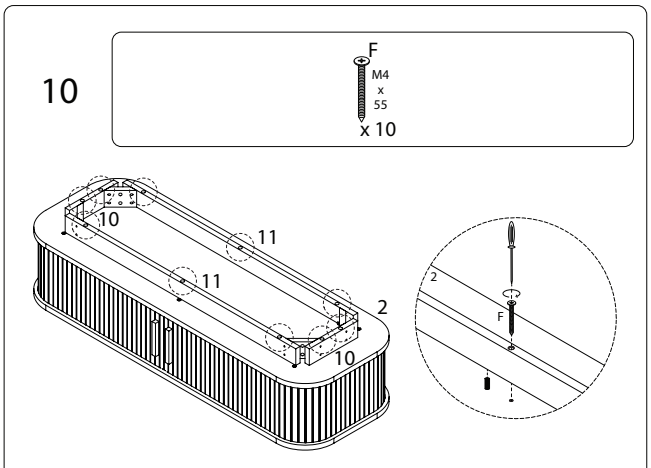

11 x 4

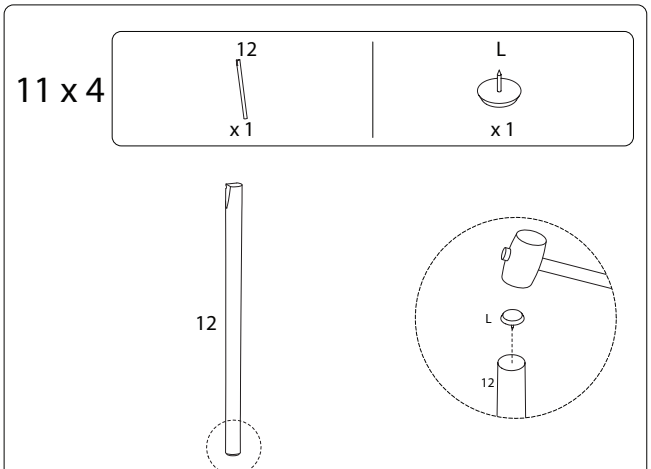

12

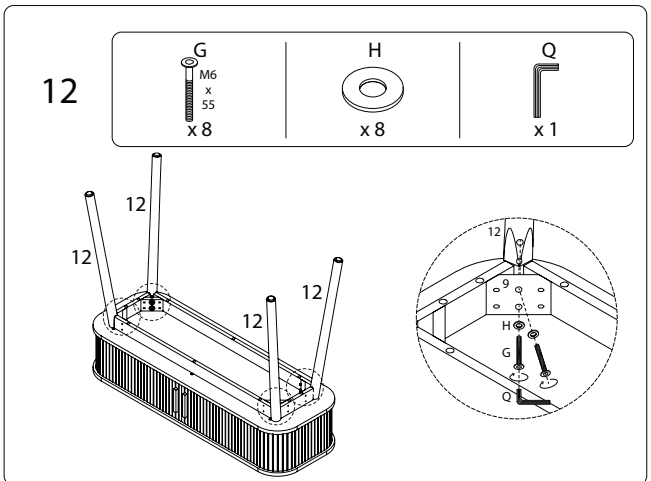

13

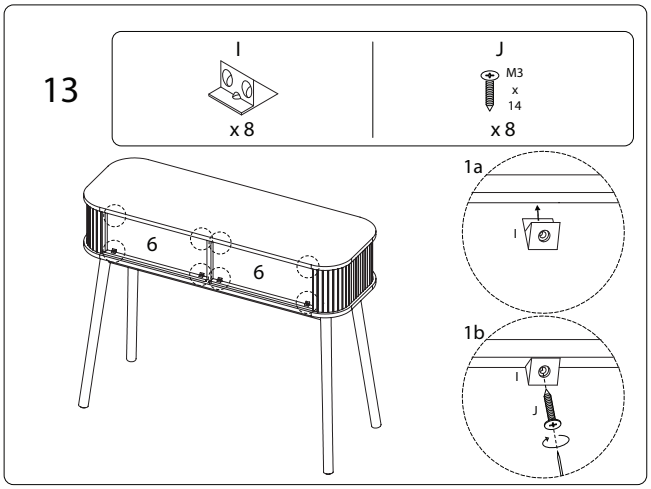

14

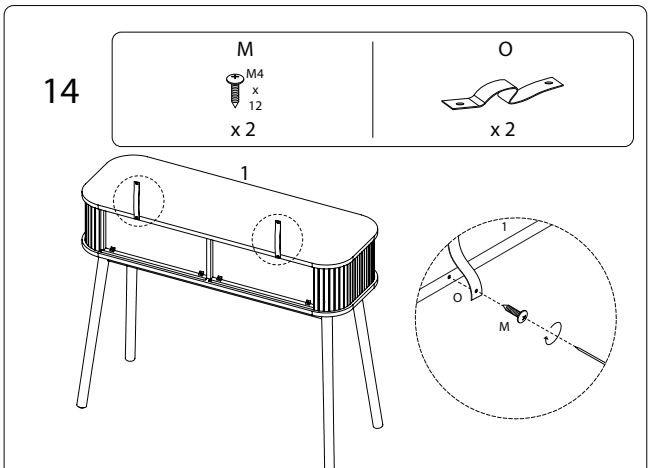

15

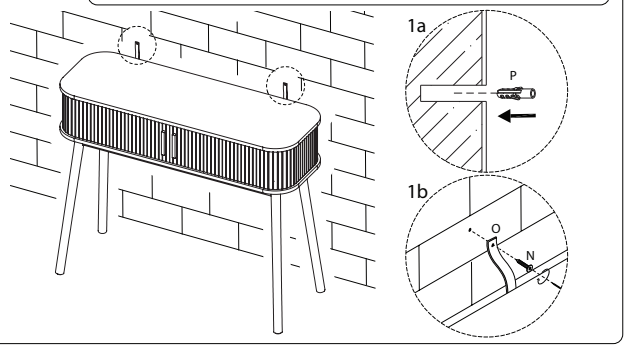

688/SELAH/300724/