COOMA

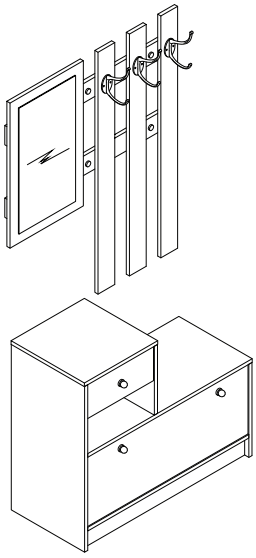

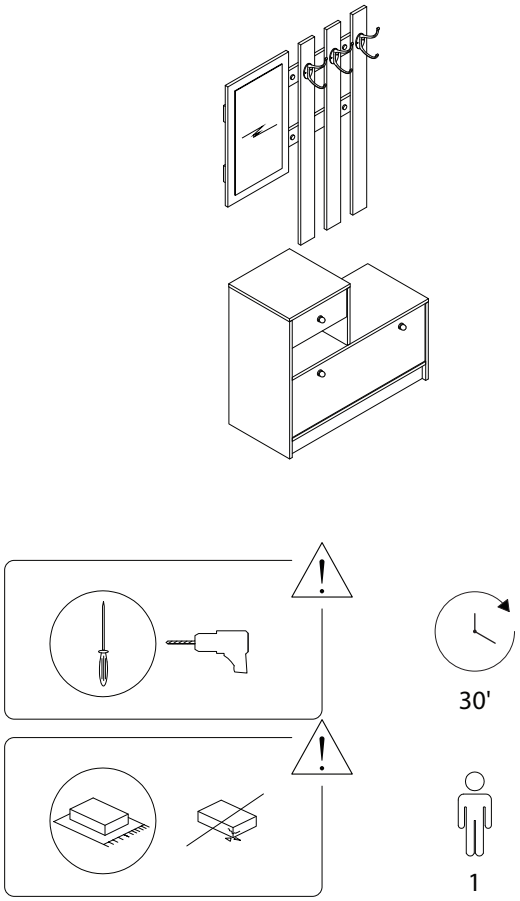
30'
1

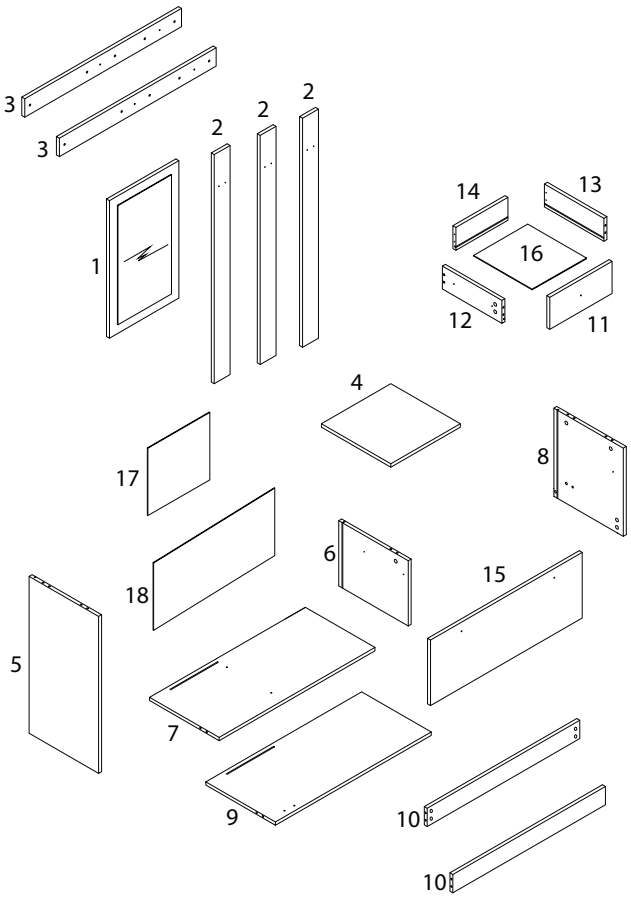
3
3
2
2
2
1
14
13
16
12
11
4
17
8
6
15
18
5
7
9
10
10

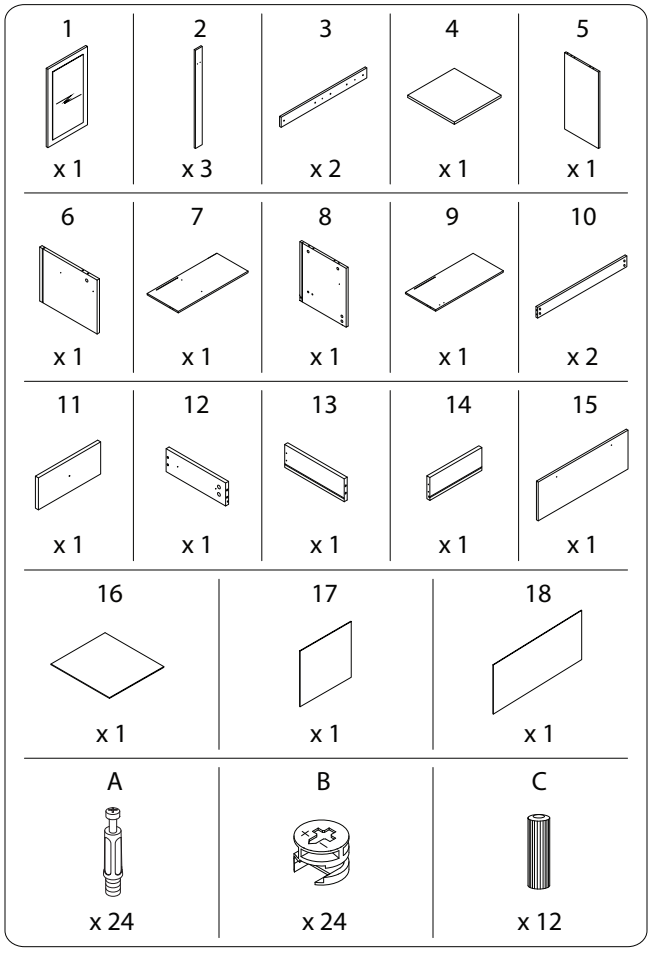
1 x 1
2 x 3
3 x 2
4 x 1
5 x 1
6 x 1
7 x 1
8 x 1
9 x 1
10 x 2
11 x 1
12 x 1
13 x 1
14 x 1
15 x 1
16 x 1
17 x 1
18 x 1
A x 24
B x 24
C x 12

D	E	F	G
3.5 x 14	M5 x 40		M4 x 18
x 33	x 2	x 3	x 3

H	I	J	K	L
		M3.5 x 35	M6 x 20	
x 1	x 2	x 4	x 10	x 3

M	N1	N2	O1	O2
		M4 x 50		
x 2	x 4	x 4	x 4	x 4

P1	P2	P3	P4	P5
		M3.5 x 12	M4 x 35	
x 1	x 2	x 1	x 1	x 1

Q	R	S	T	U
		M3.5 x 12		
x 20	x 10	x 10	x 1	x 1

1

4	7	8	11	A
x 1	x 1	x 1	x 1	x 16

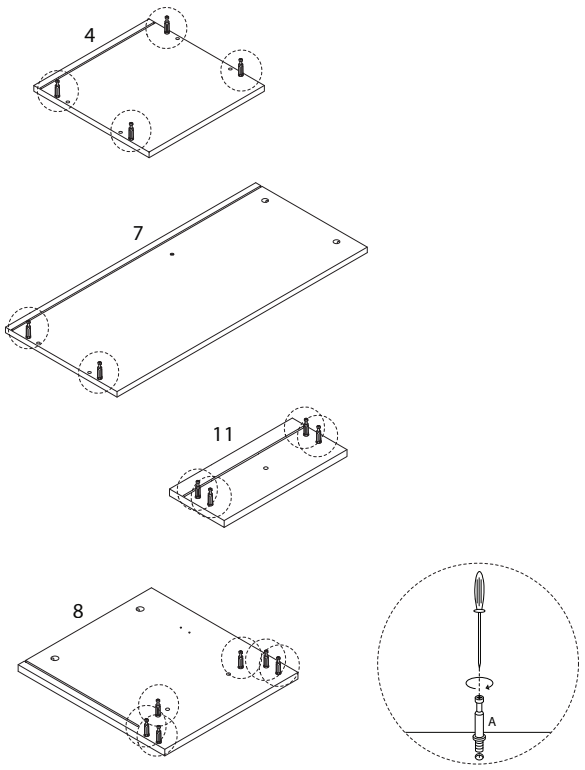

2

D	F	G	T
3.5 x 14		M4 x 18	
x 2	x 1	x 1	x 1

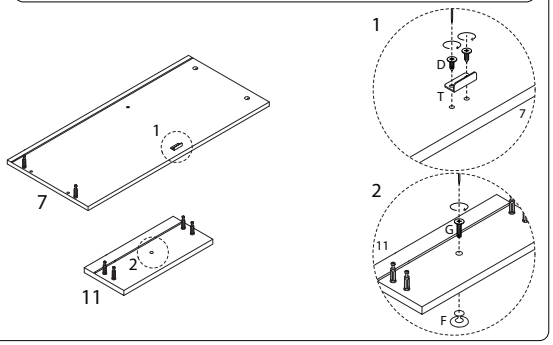

4

5	A
x 1	x 8

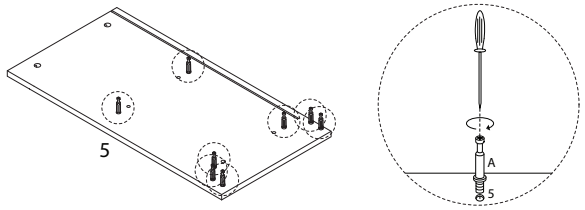

3

M
x 2

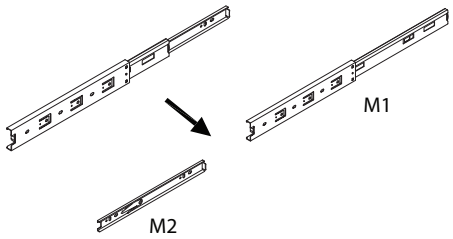

5

6	D	M1
x 1	3.5 x 14 x 4	x 2

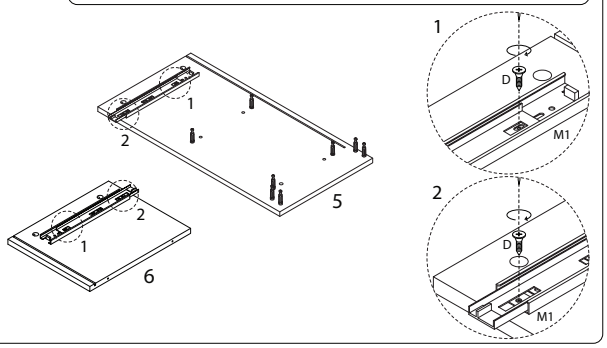

6

15	D	F	G	I
x 1	3.5 x 14 x 4	x 2	M4 x 18 x 2	x 2

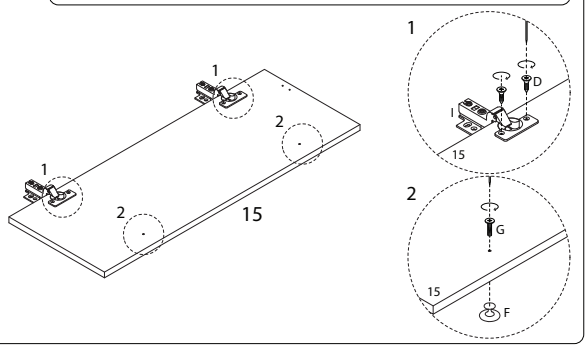

7

E
M5 x 40 x 2

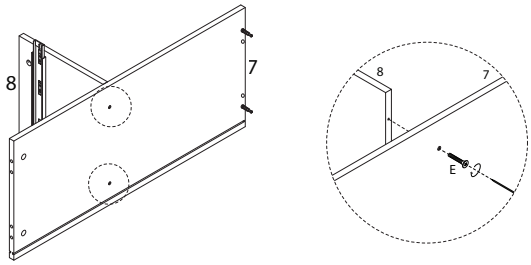

8

C
x 2

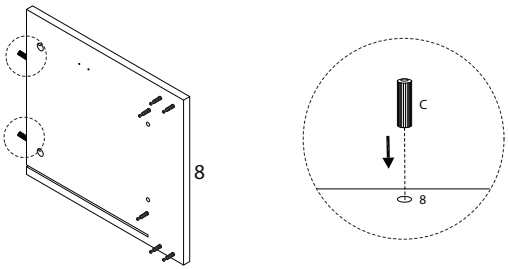

9

B
x 2

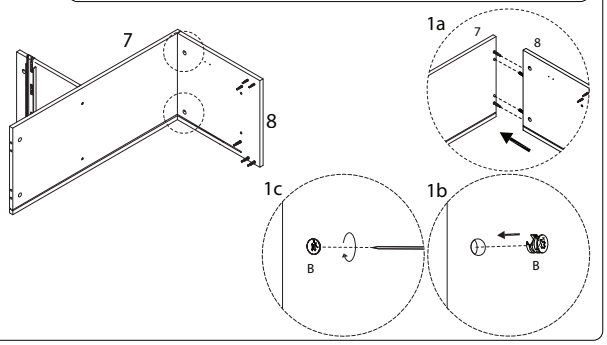

10

9	C
x 1	x 2

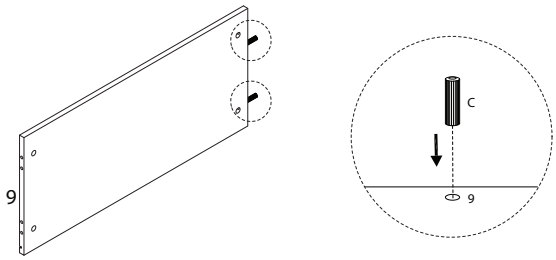

11

B
x 2

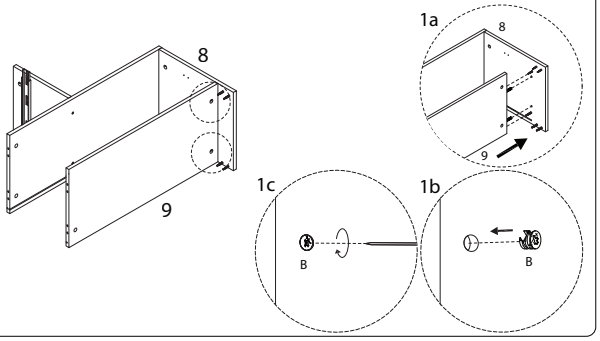

12

10	B
x 2	x 4

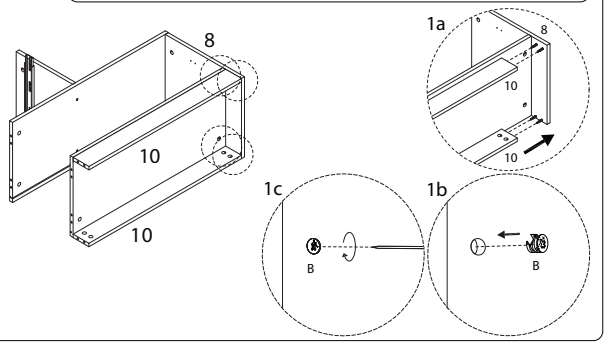

13

C
x 4

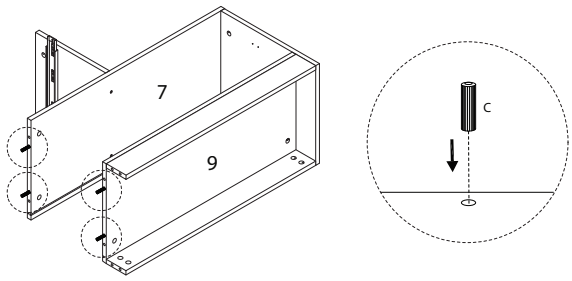

14

18

x 1

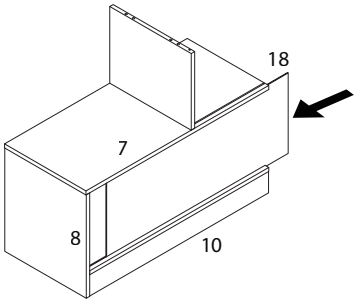

15

B

x 8

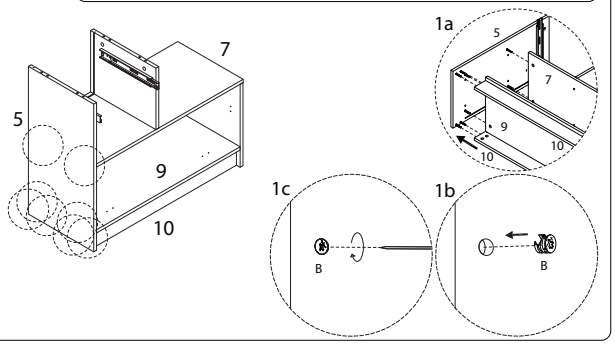

16

17

x 1

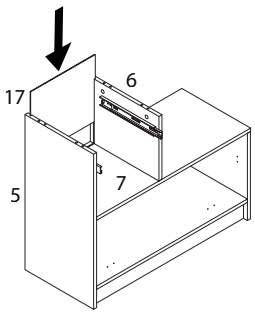

17

C

x 4

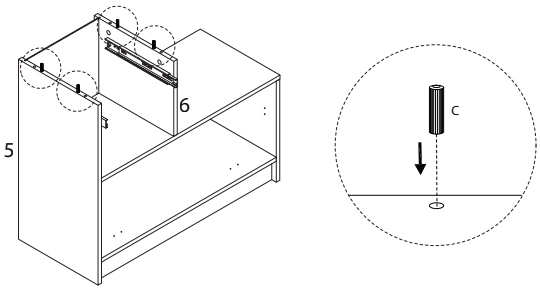

18

B

x 4

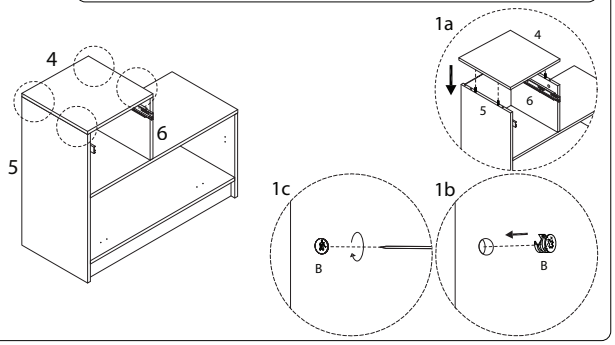

19

D

3.5 x 14

x 13

H

x 1

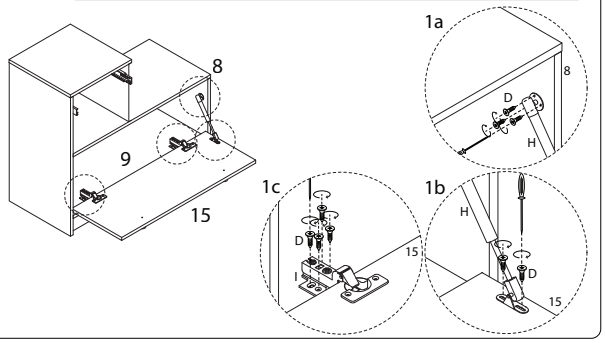

20

J

M3.5 x 35

x 4

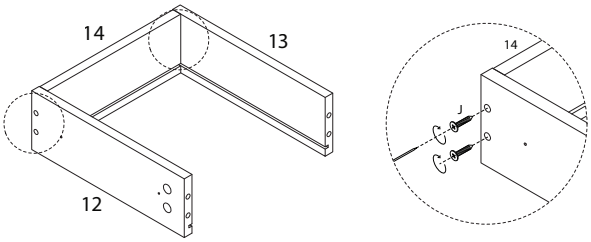

21

16

x 1

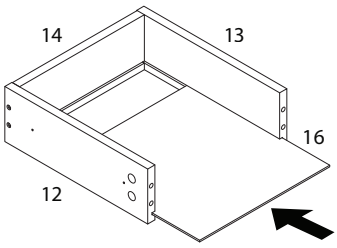

22

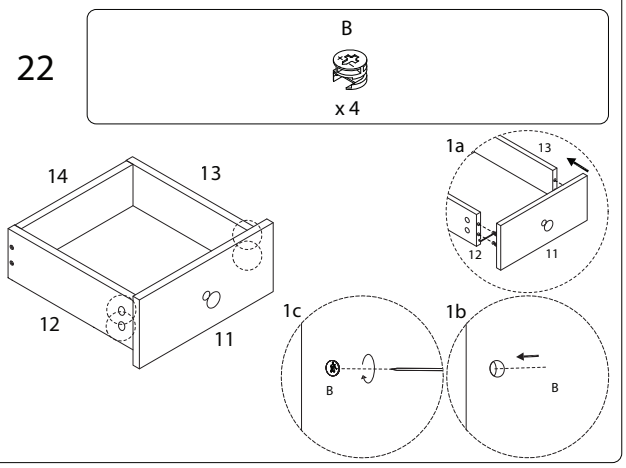

23

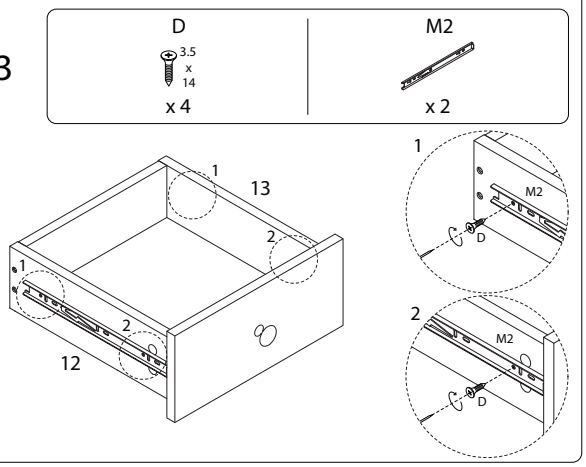

24

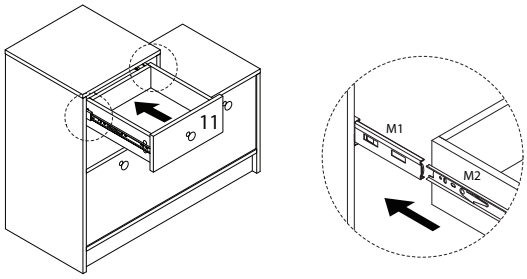

25

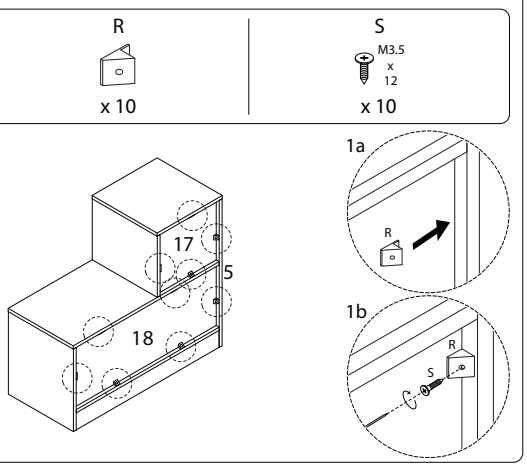

26

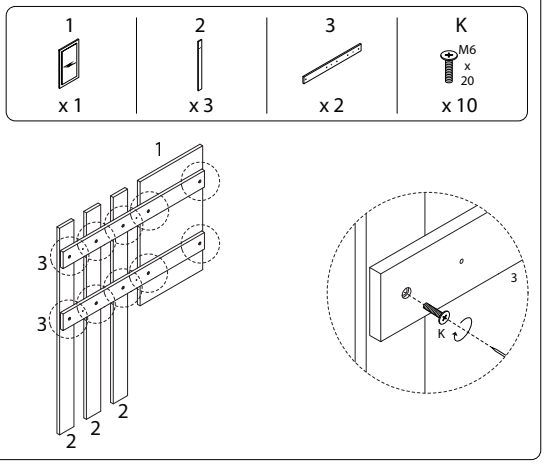

27

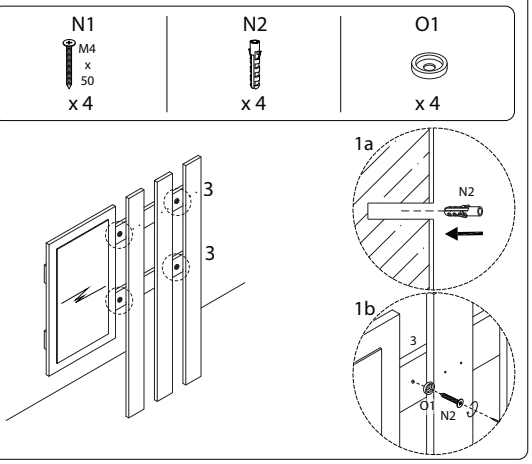

28

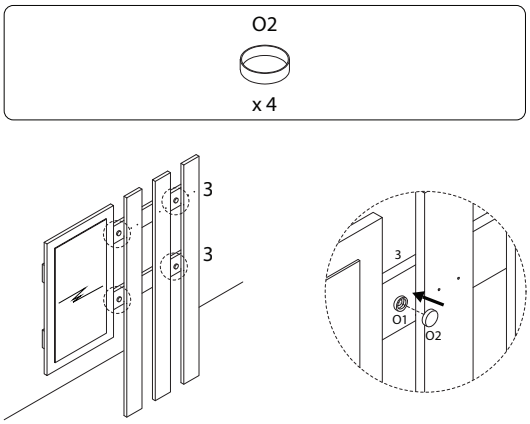

29

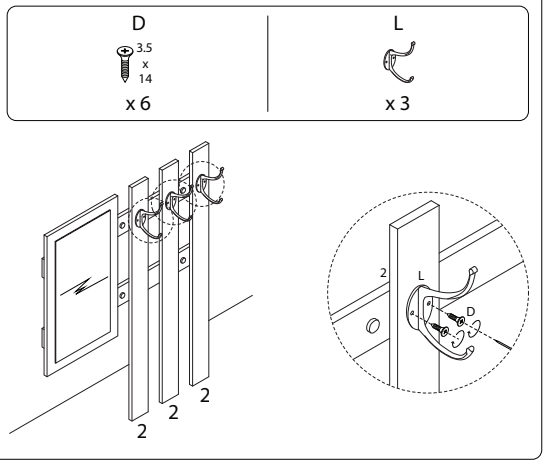

30

P1	P2	P3	P4	P5
x 1	x 2	M3.5 x 12 x 1	M4 x 35 x 1	x 1

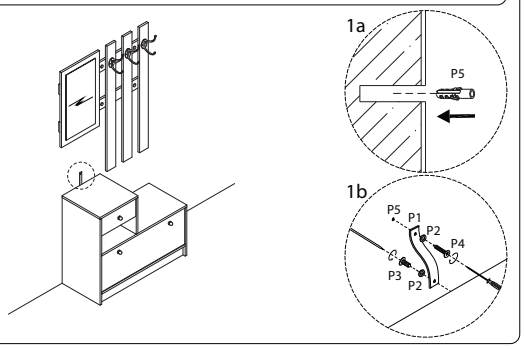

31

Q
x 20

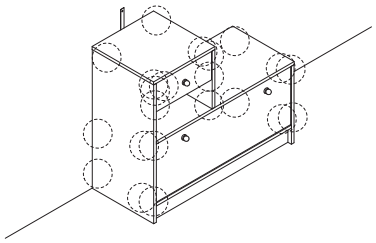

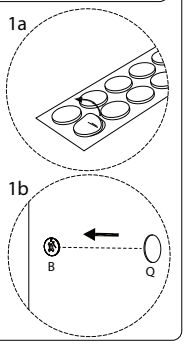

2754/COOMA/160226/