SKARO

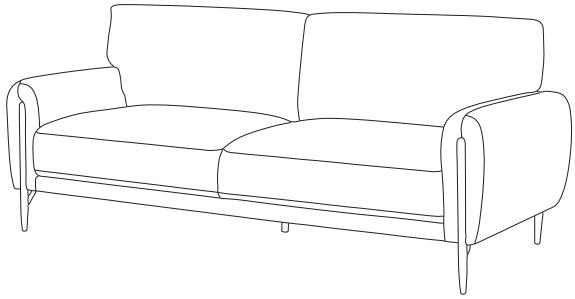

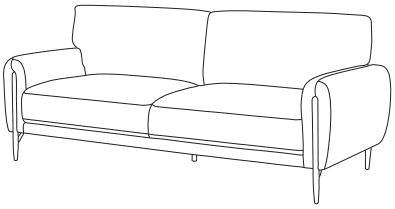

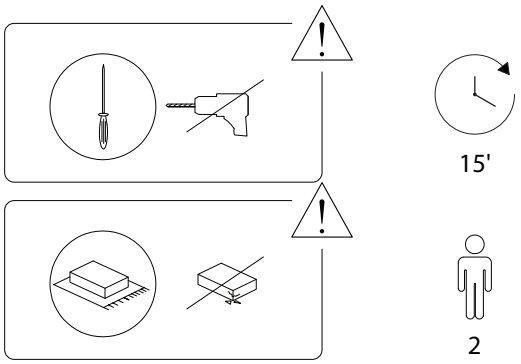
15'
2

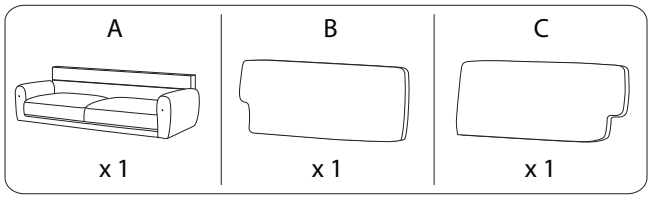
A
x 1
B
x 1
C
x 1

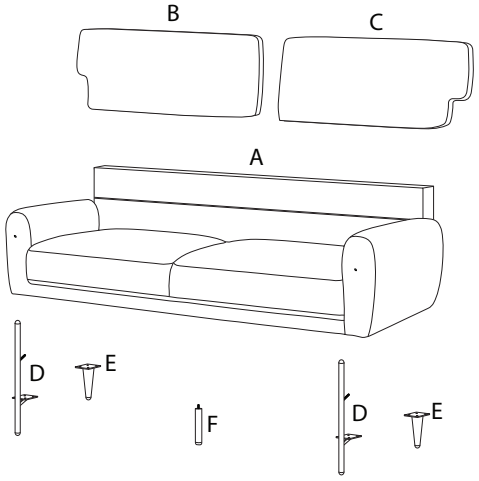
B
C
A
D
E
F
D
E

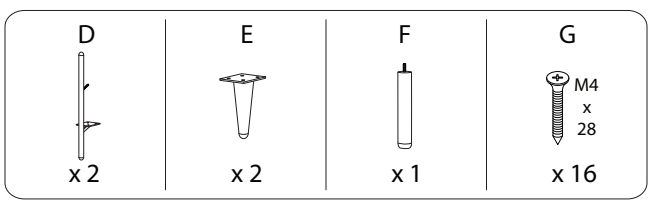
D
x 2
E
x 2
F
x 1
G
M4
x
28
x 16

1

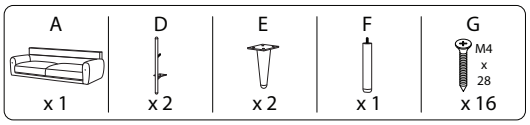
A
x 1
D
x 2
E
x 2
F
x 1
G
M4
x
28
x 16

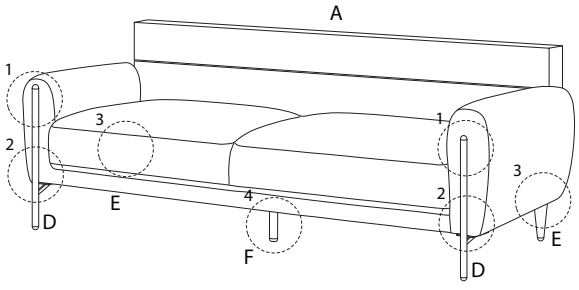
A
1
2
3
E
4
D
F
1
3
2
E
D

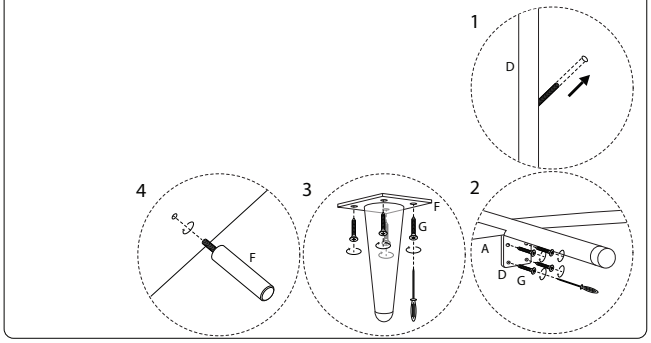
1
D
4
F
3
F
G
2
A
D
G

2

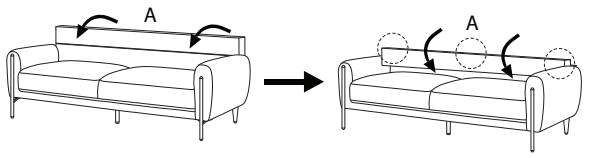

3

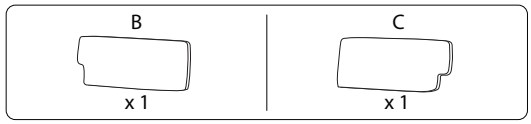

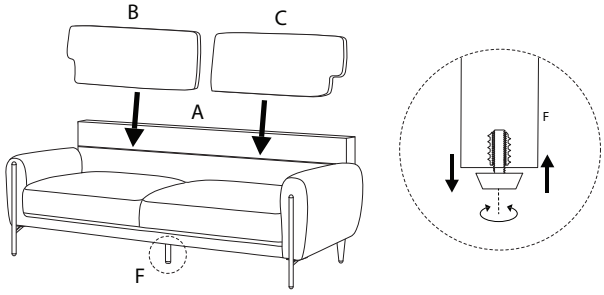

2429/SKARO/300926/