SURREY

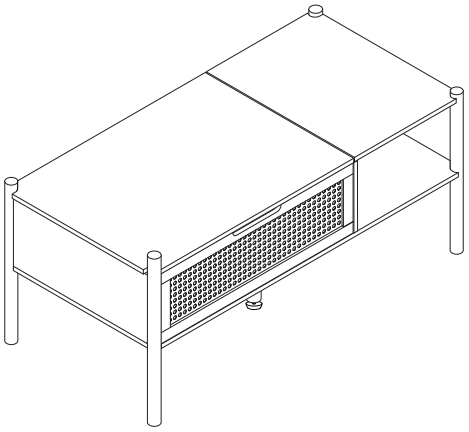

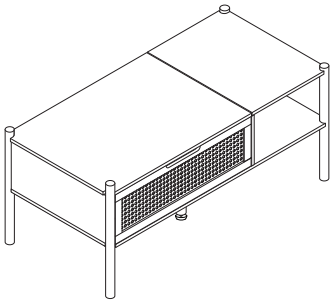

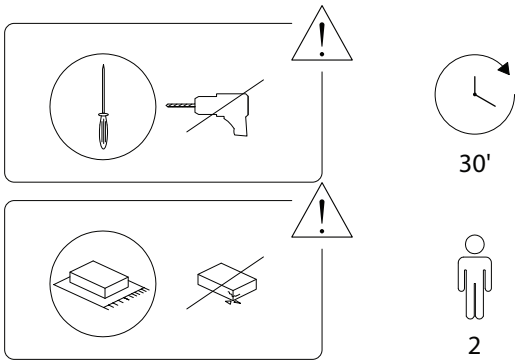

1/11

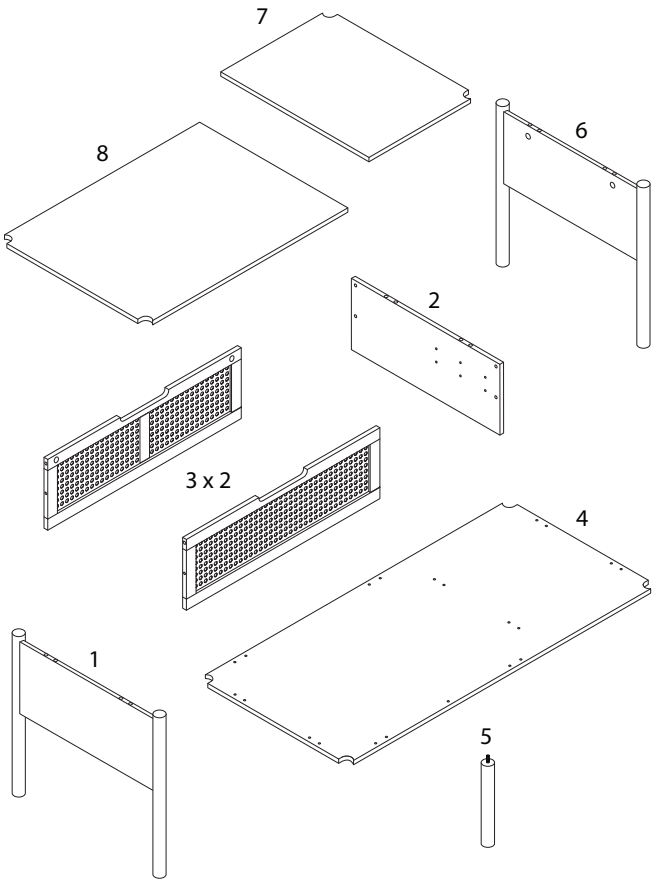

2/11

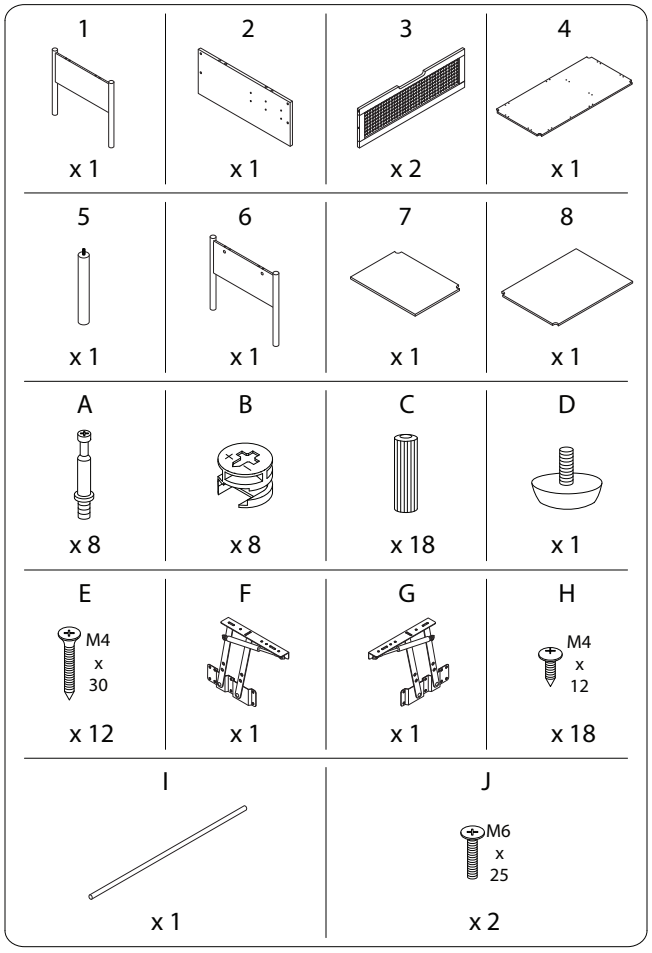

3/11

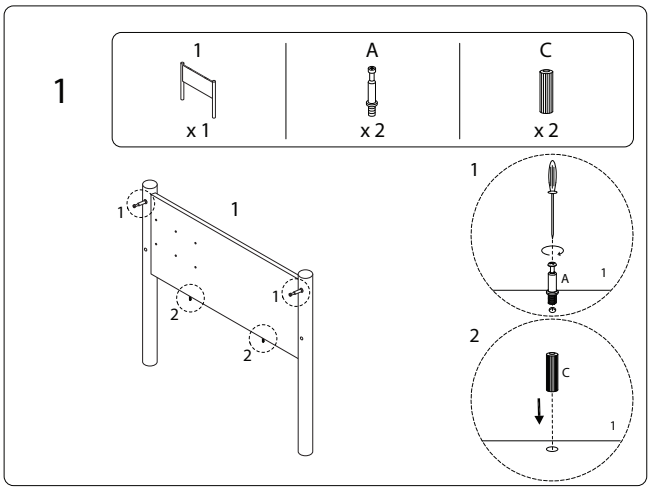
1
1
x 1
A
x 2
C
x 2
1
2
A
C

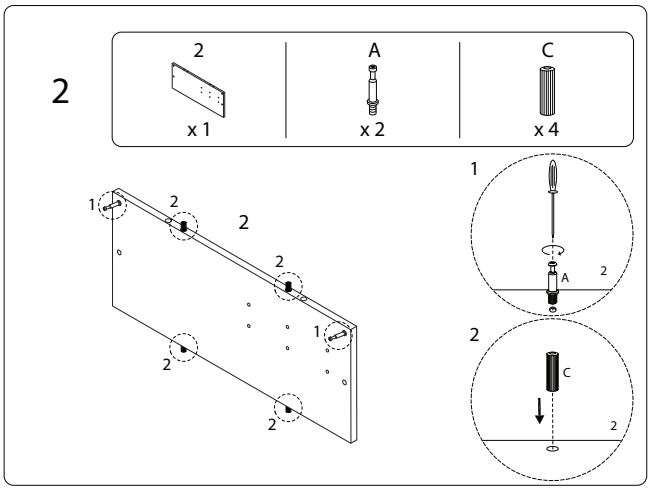
2
2
x 1
A
x 2
C
x 4
1
2
A
C

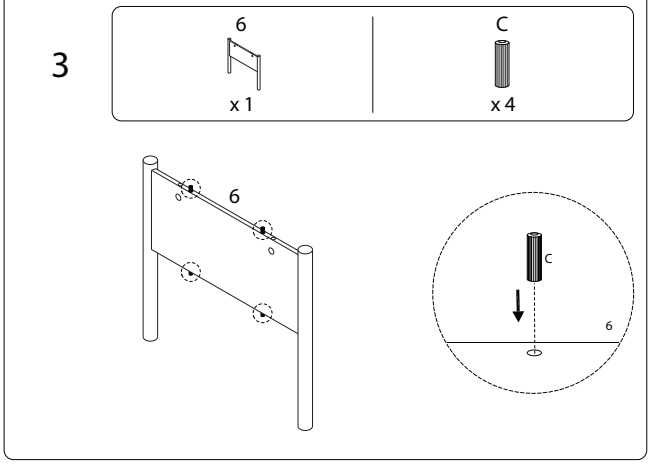
3
6
x 1
C
x 4
6
C

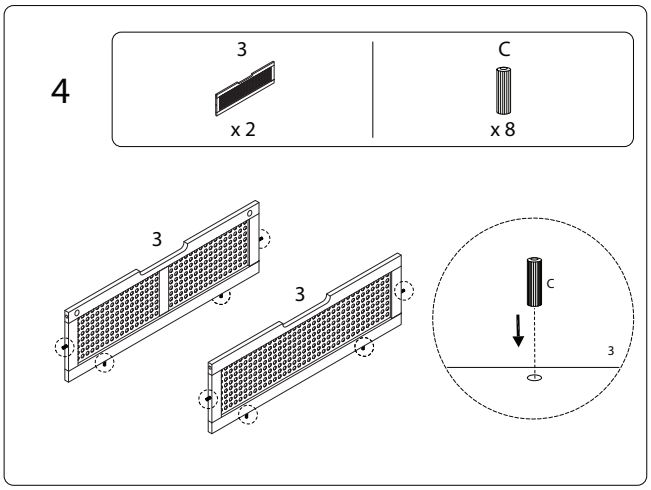
4
3
x 2
C
x 8
3
3
C

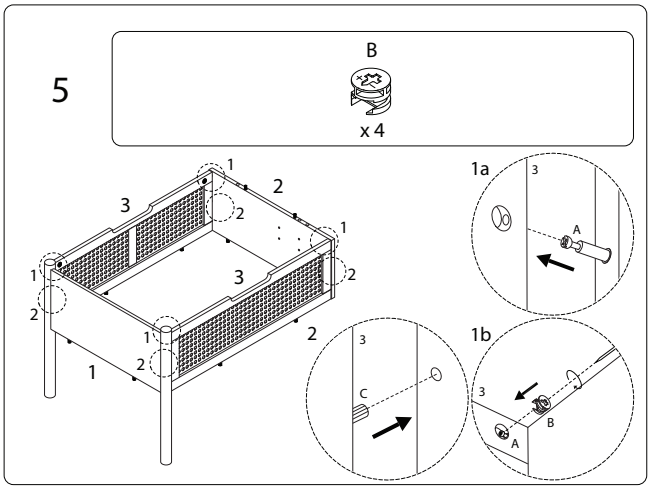
5
B
x 4
1a
1b
A
B
C

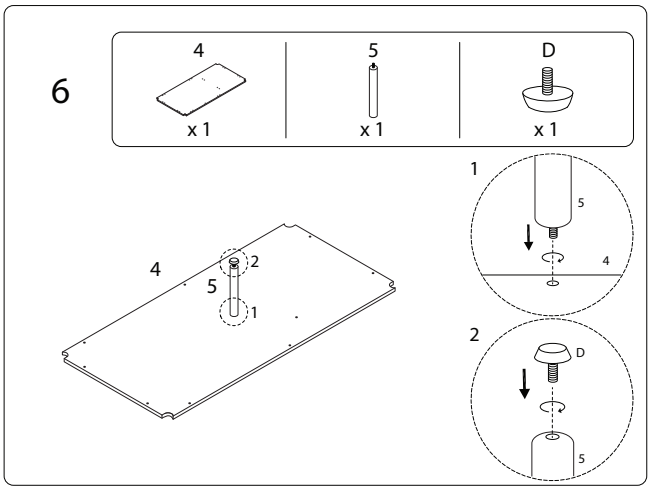
6
4
x 1
5
x 1
D
x 1
1
2
D

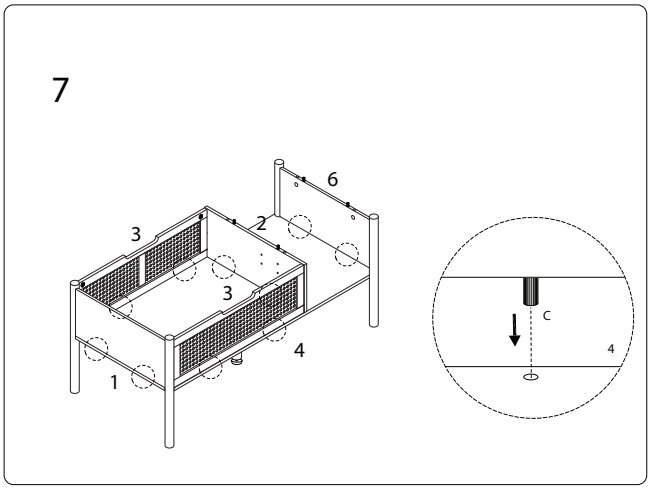
7
6
3
2
3
4
1
C

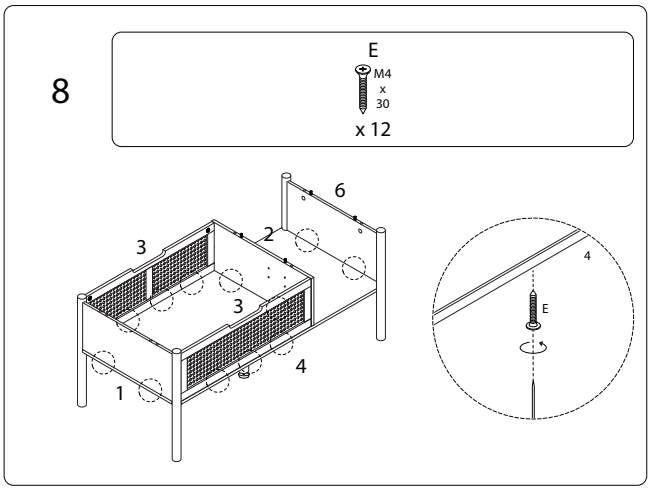
8
E
M4
x
30
x 12
6
3
2
3
4
1
E

9

7 x 1

A x 4

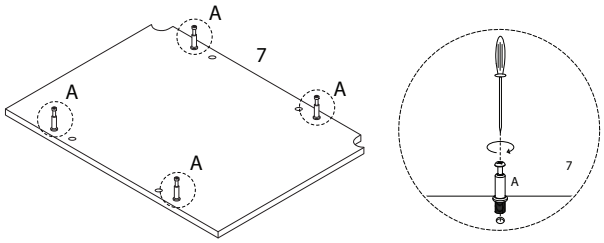

10

B x 4

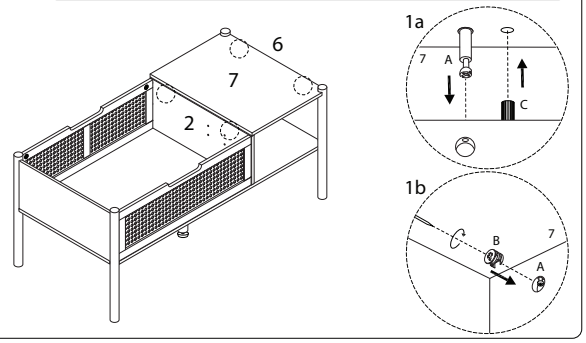

8/11

2359/SURREY/101224/

11

F x 1

G x 1

I x 1

J M6 x 25 x 2

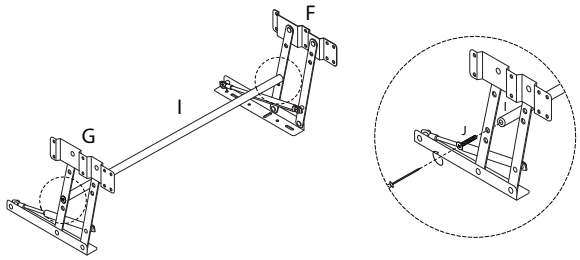

12

8 x 1

H M4 x 12 x 6

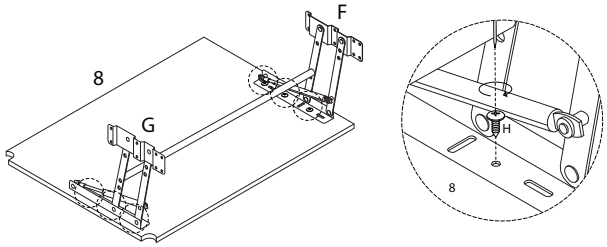

9/11

2359/SURREY/101224/

13

H M4 x 12 x 12

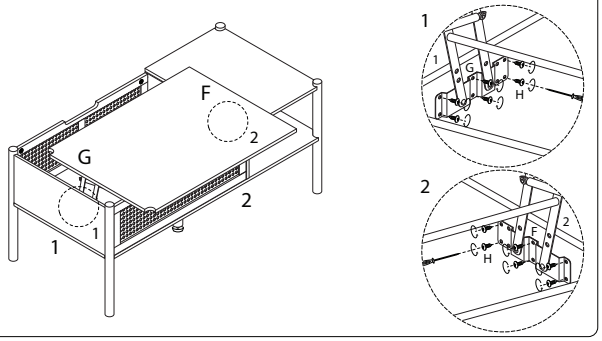

!

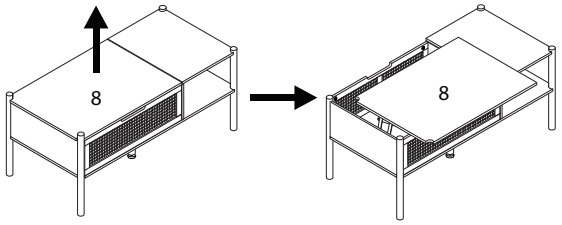

14

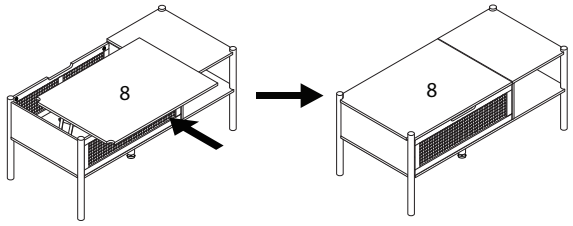

10/11

2359/SURREY/101224/

11/11

2359/SURREY/101224/