# BOUSSE

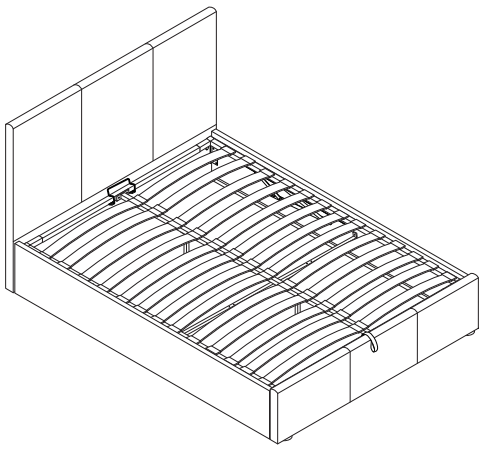

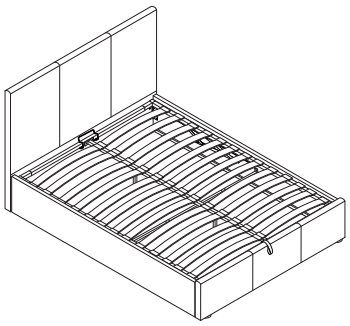

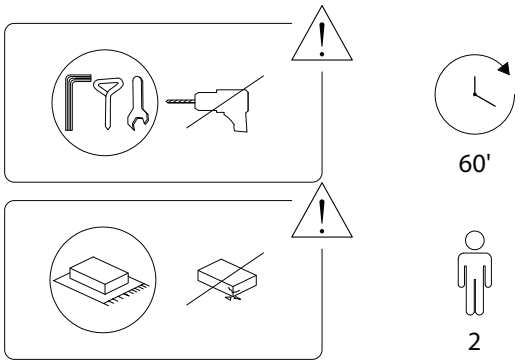






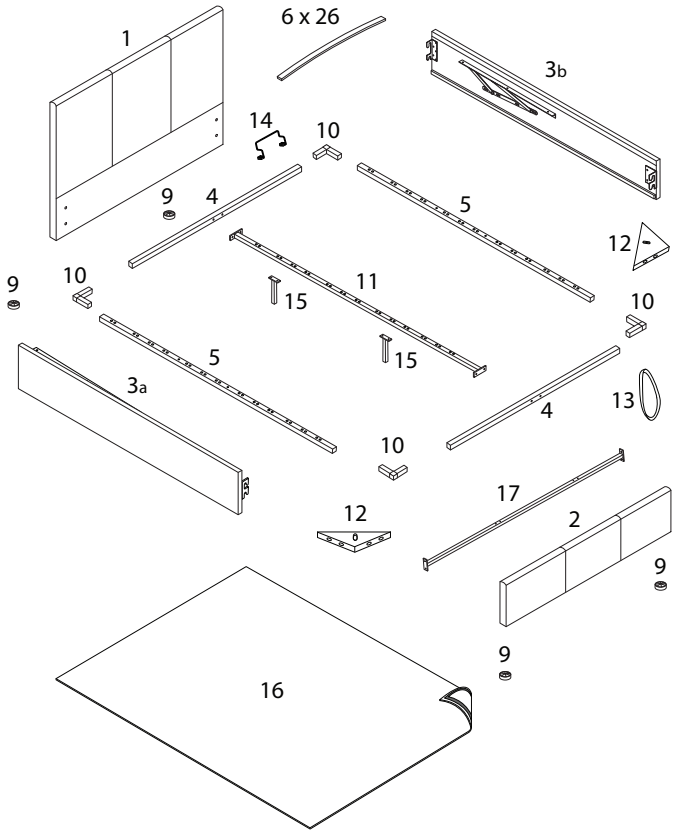






| | | | |
|---|---|---|---|
| 1 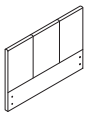 x 1 | 2 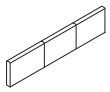 x 1 | 3a 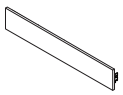 x 1 | 3b 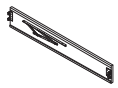 x 1 |
| 4 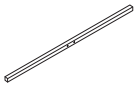 x 2 | 5  x 2 | 6 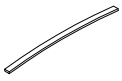 x 26 | 7 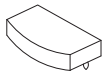 x 26 |
| 8 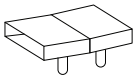 x 13 | 9  x 4 | 10 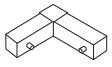 x 4 | 11  x 1 |
| 12 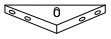 x 2 | 13  x 1 | 14  x 1 | 15  x 2 |
| 16  x 1 | | 17 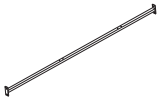 x 1 | |

| A | B |
|---|---|
|  M8 x 30 |  M8 x 40 |
| x 16 | x 14 |
| C | D |
|  |  |
| x 14 | x 8 |
| E | F |
|  |  |
| x 8 | x 1 |
| G | H |
|  |  |
| x 1 | x 1 |
| I | J |
|  M8 x 25 |  M4 x 40 |
| x 4 | x 4 |



2057/BOUSSE/280425/

1

| 1 | 2 | A | D | E | F |
|---|---|---|---|---|---|
| x 1 | x 1 | M8 x 30 x 8 | x 8 | x 8 | x 1 |

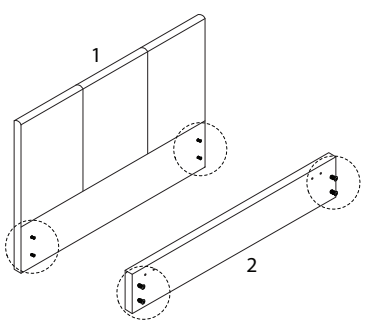


2

| 3a | 3b | F |
|---|---|---|
| x 1 | x 1 | x 1 |

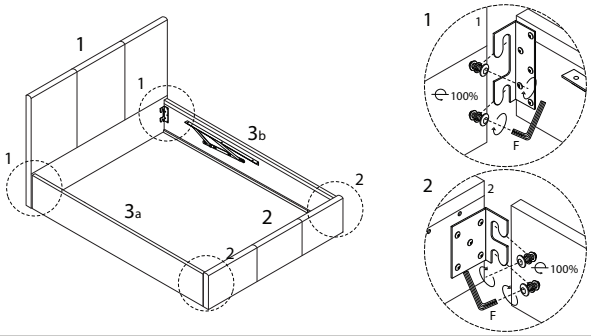




2057/BOUSSE/280425/

3

| 12 | A | F |
|---|---|---|
| x 2 | M8 x 30 x 8 | x 1 |

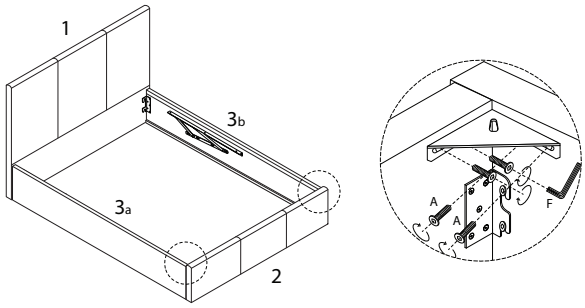


5

| 11 | B | C | H | G |
|---|---|---|---|---|
| x 1 | M8 x 40 x 4 | x 4 | x 1 | x 1 |

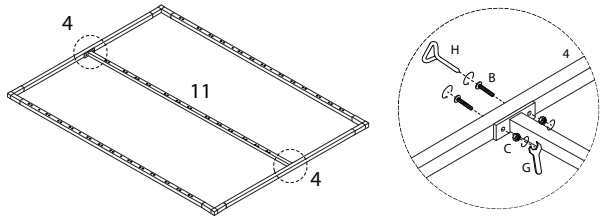


4

| 4 | 5 | 10 |
|---|---|---|
| x 2 | x 2 | x 4 |

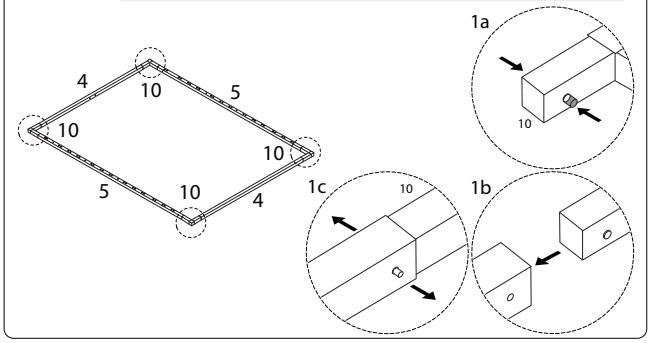




2057/BOUSSE/280425/

6

| 14 |
|---|
| x 1 |

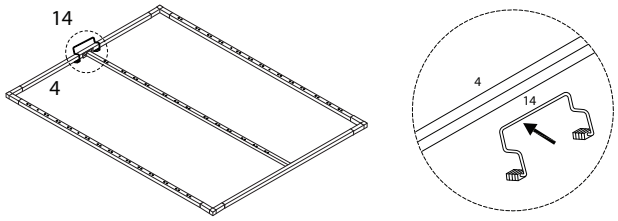




2057/BOUSSE/280425/

## 7

13
x 1

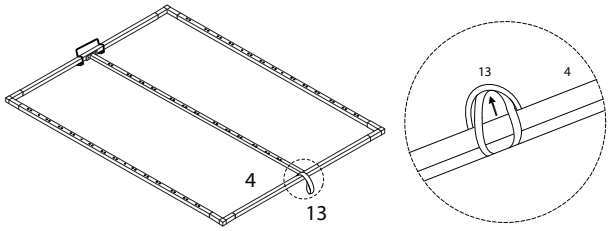


## 8

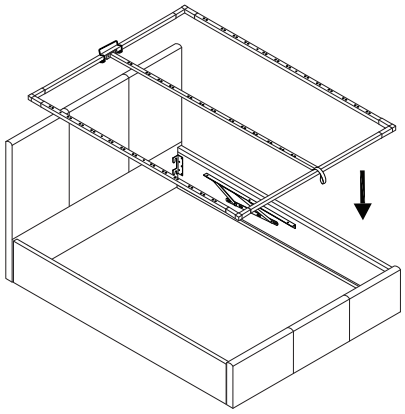

8/13



## 9

| B | C | G | H |
|---|---|---|---|
| M8 x 40 | | | |
| x 6 | x 6 | x 1 | x 1 |

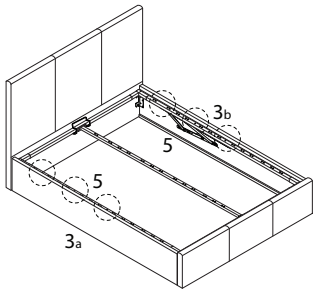


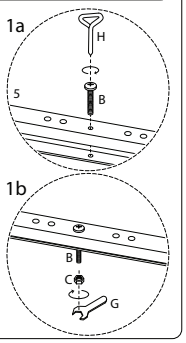


## 10

| B | C | G | H |
|---|---|---|---|
| M8 x 40 | | | |
| x 4 | x 4 | x 1 | x 1 |

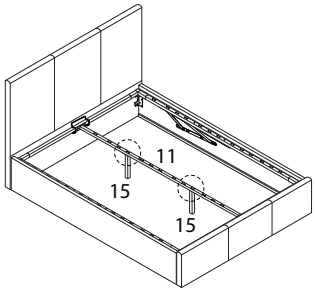


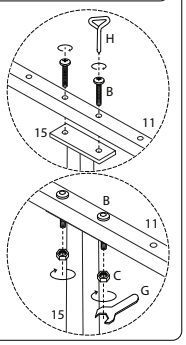


9/13



## 11

H
x 1

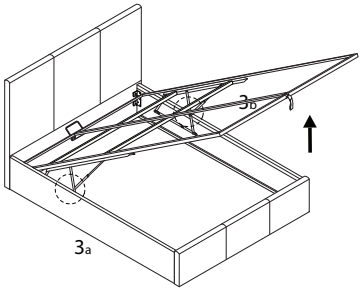


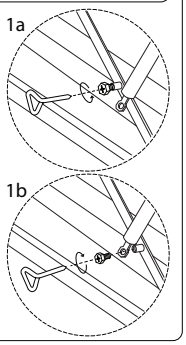


## 13 x 13

| 6 | 7 | 8 |
|---|---|---|
| x 2 | x 2 | x 1 |

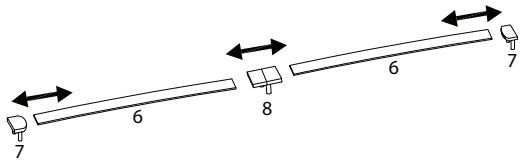


## 12

| 17 | I | F |
|---|---|---|
| | M8 x 25 | |
| x 1 | x 4 | x 1 |

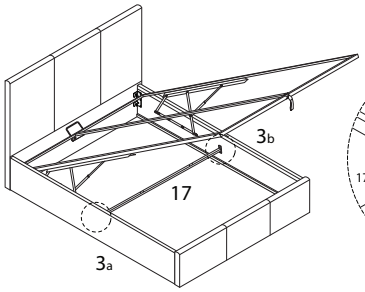


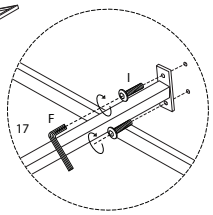


10/13



## !

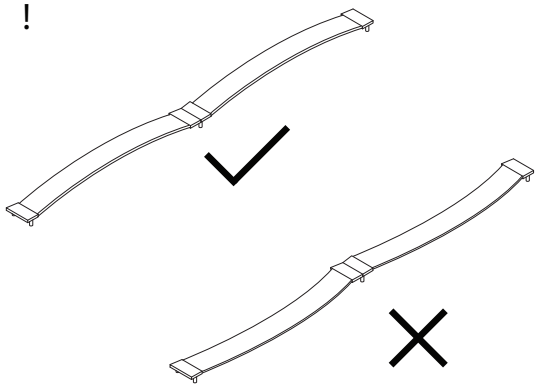

11/13

## 14

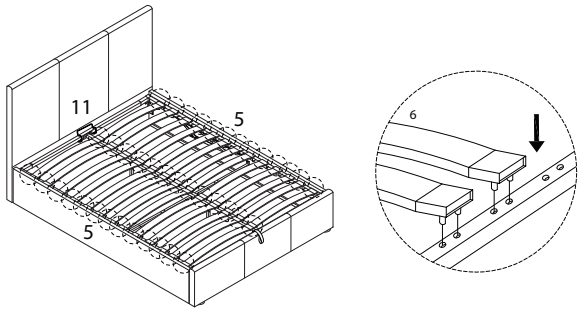


## 15

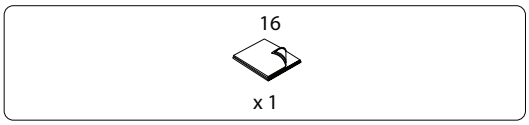


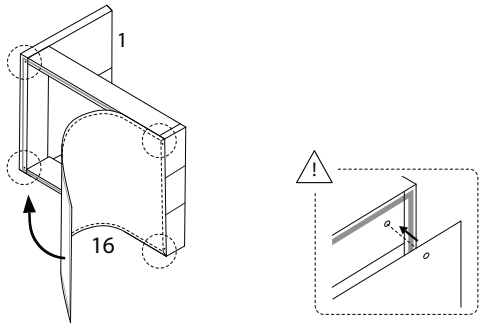






## 16

