CILENS

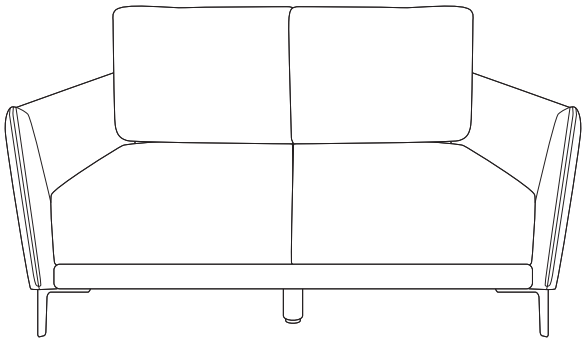

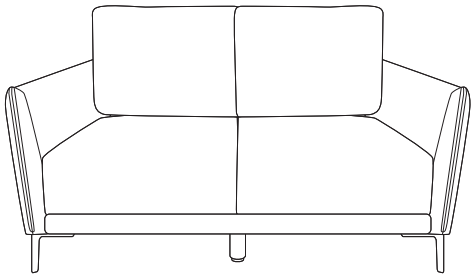

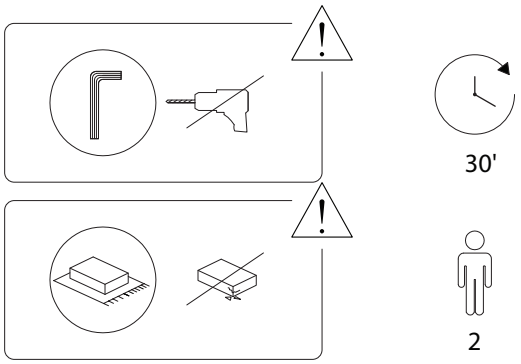
30'
2

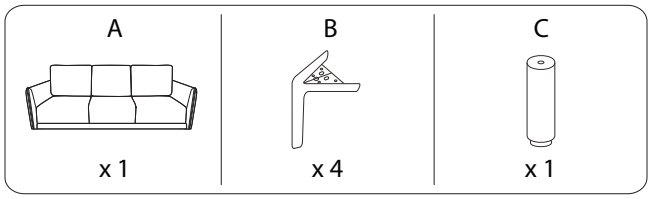
A
x 1
B
x 4
C
x 1

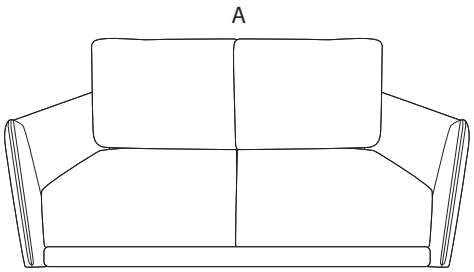
A

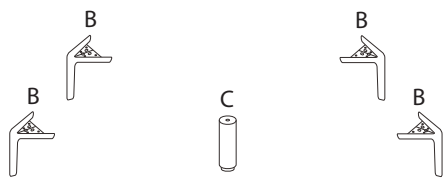
B
B
C
B
B

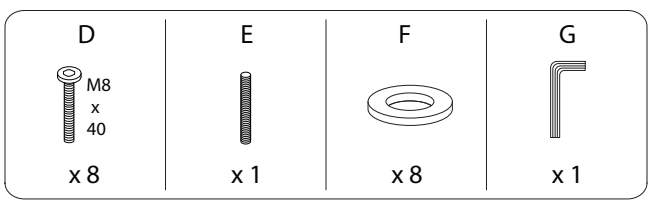
D
M8
x
40
x 8
E
x 1
F
x 8
G
x 1

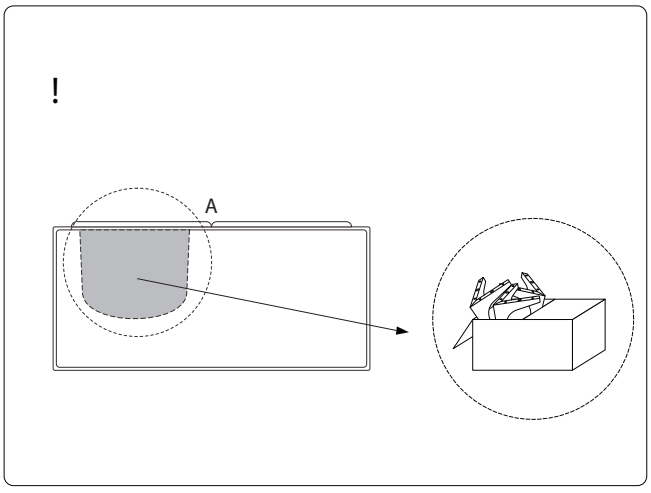
!
A

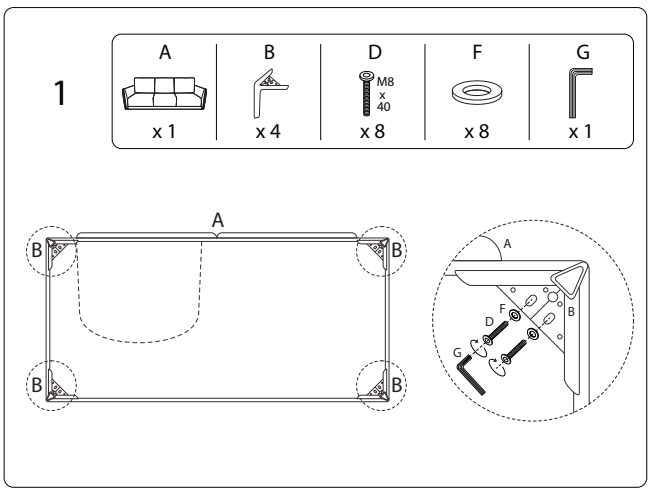
1
A
x 1
B
x 4
D
M8
x
40
x 8
F
x 8
G
x 1
A
B
B
B
B
A
F
D
B
G

2

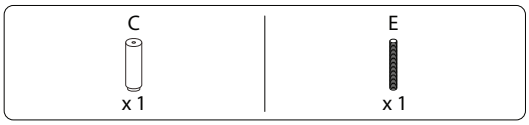

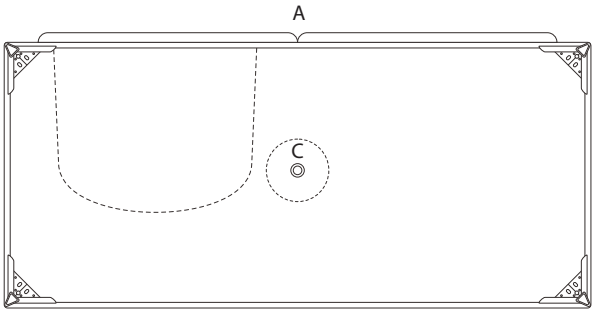

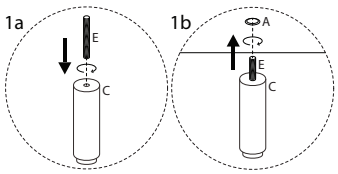

1033/CILENS/191026/