LAMBRES

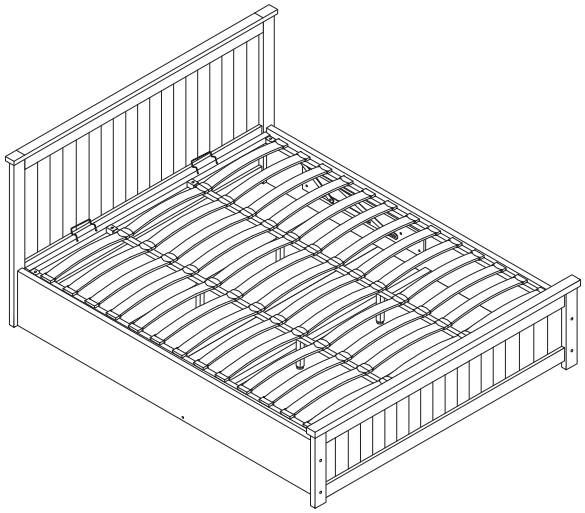

1/15

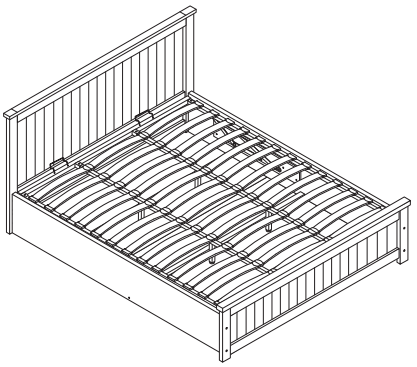

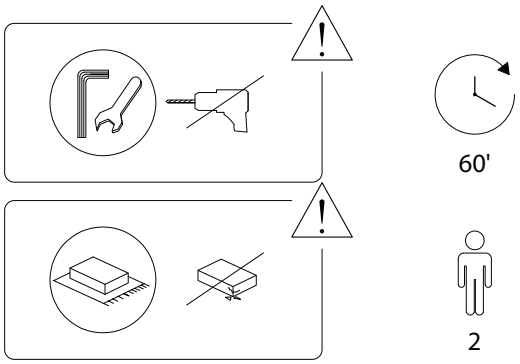

2/15

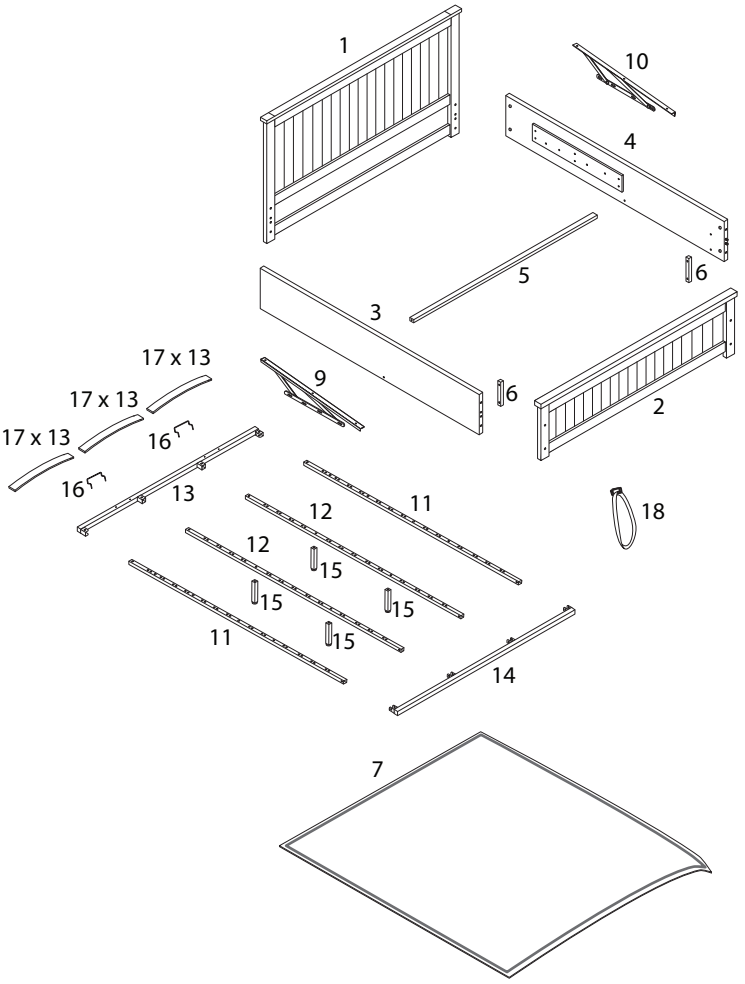

3/15

1  x 1	2 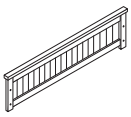 x 1	3 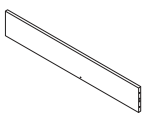 x 1	4 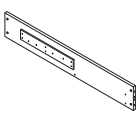 x 1
5 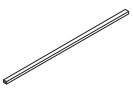 x 1	6  x 2	7 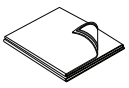 x 1	
9 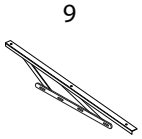 x 1	10 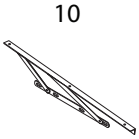 x 1	11 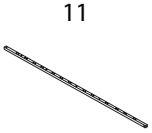 x 2	12 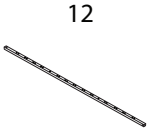 x 2
13 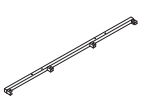 x 1	14 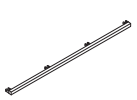 x 1	15  x 4	16  x 2
17 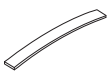 x 39	18  x 1	19  x 26	20  x 26

4/15

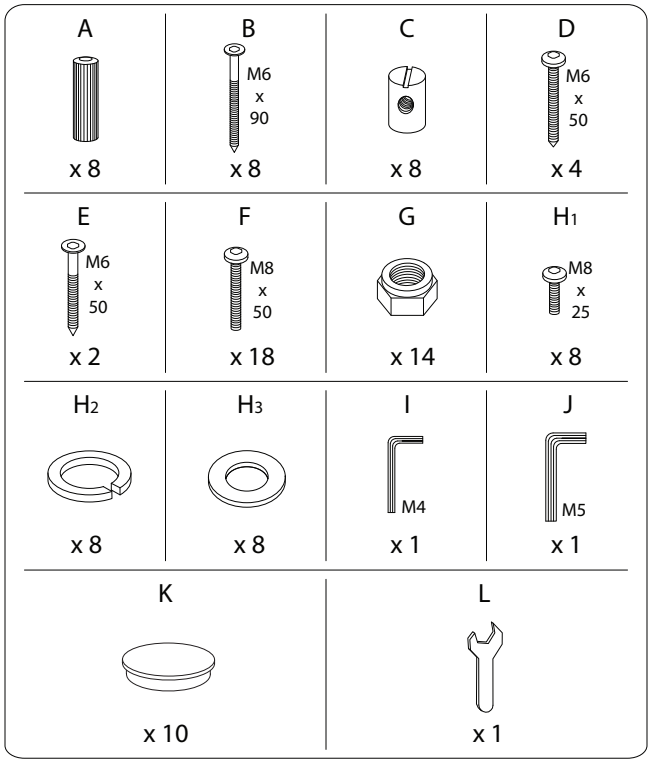
A
x 8
B
M6 x 90
x 8
C
x 8
D
M6 x 50
x 4
E
M6 x 50
x 2
F
M8 x 50
x 18
G
x 14
H1
M8 x 25
x 8
H2
x 8
H3
x 8
I
M4
x 1
J
M5
x 1
K
x 10
L
x 1

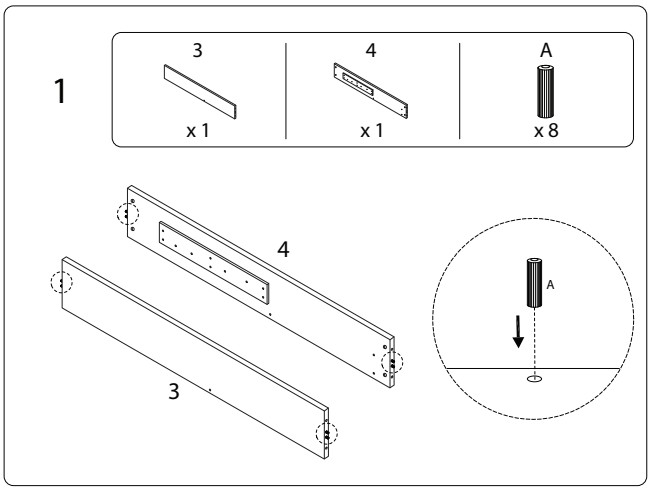
1
3
x 1
4
x 1
A
x 8
4
3
A

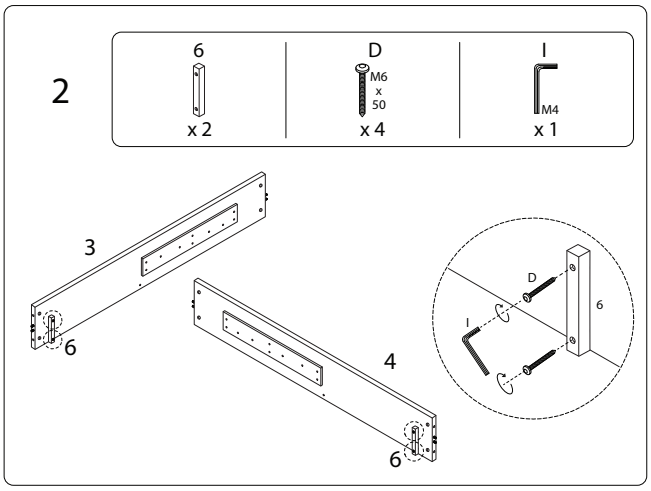
2
6
x 2
D
M6 x 50
x 4
I
M4
x 1
3
6
4
6
D
I
6

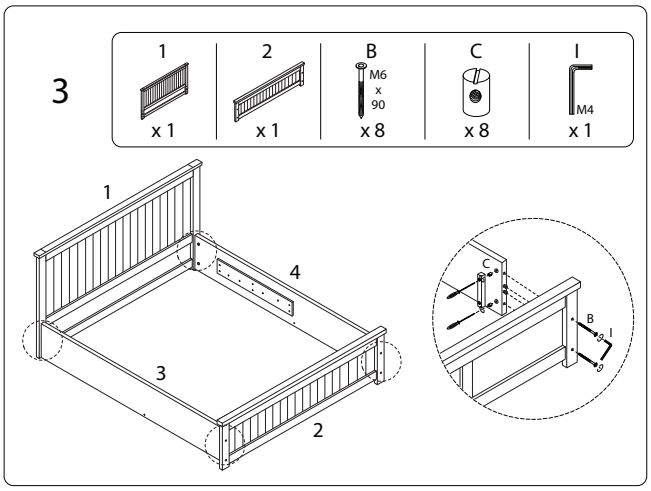
3
1
x 1
2
x 1
B
M6 x 90
x 8
C
x 8
I
M4
x 1
1
4
3
2
C
B
I

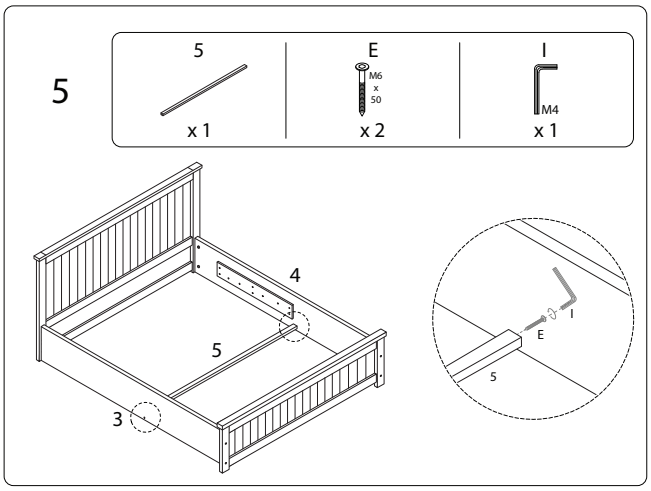
5
x 1
E
M6 x 50
x 2
I
M4
x 1
4
5
3
I
E
5

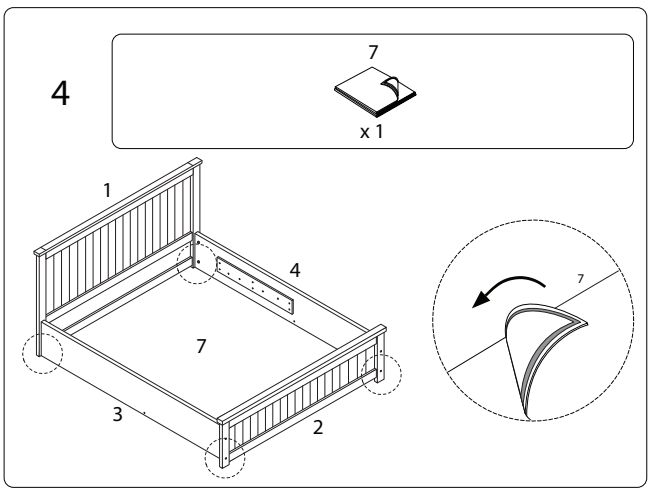
4
7
x 1
1
4
7
3
2
7

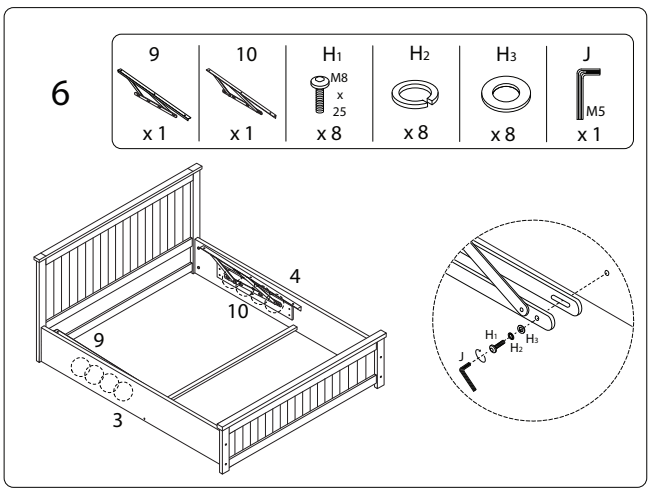
6
9
x 1
10
x 1
H1
M8 x 25
x 8
H2
x 8
H3
x 8
J
M5
x 1
4
10
9
3
H1
H3
H2
J

7

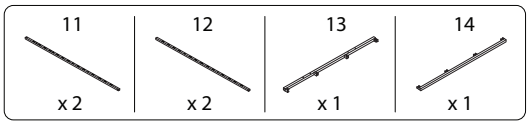

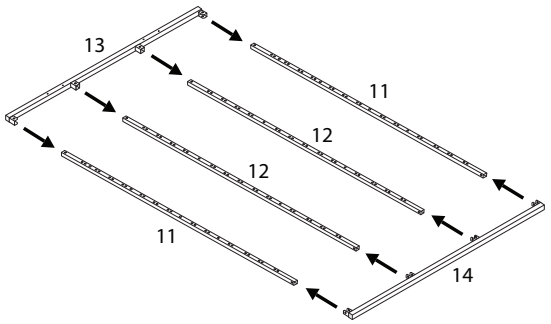

8

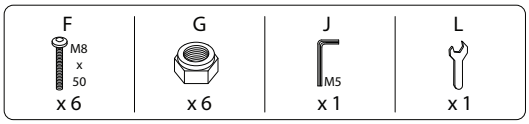

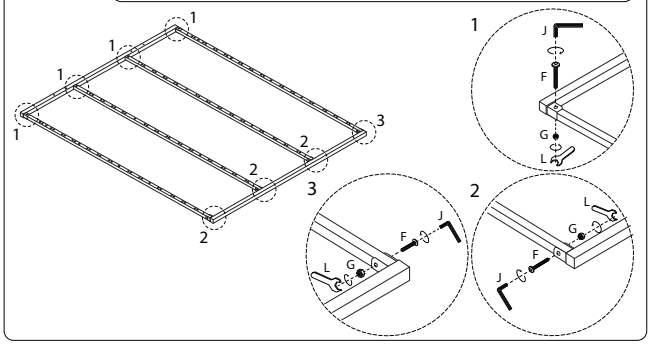

9

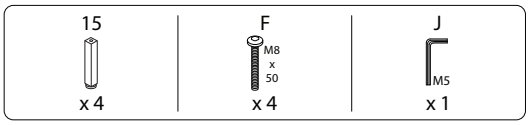

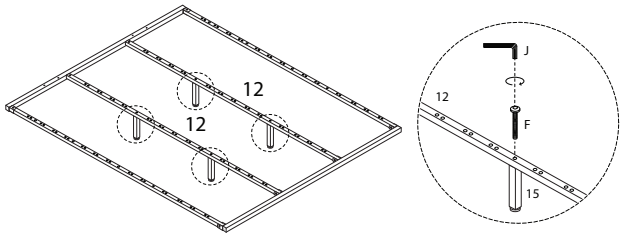

10

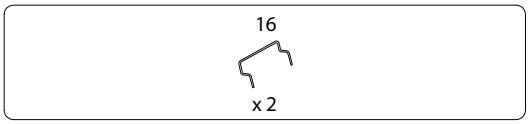

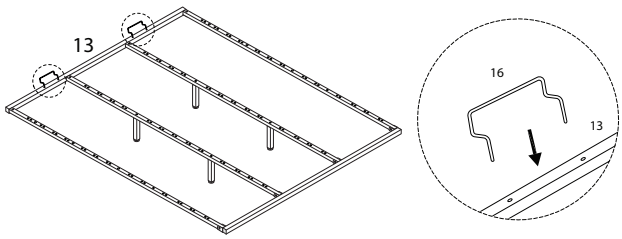

11

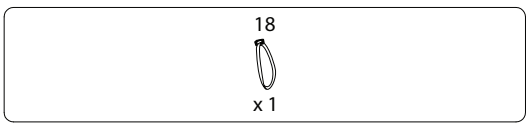

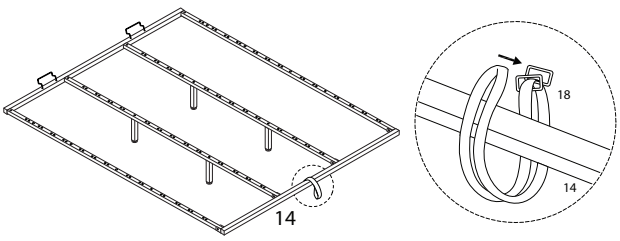

12

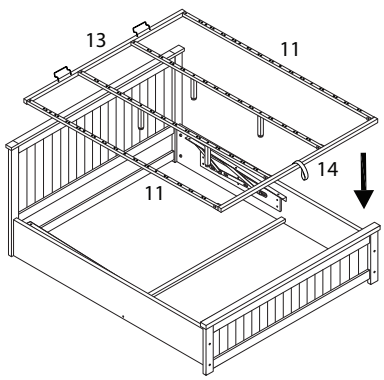

13

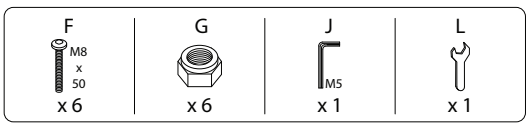

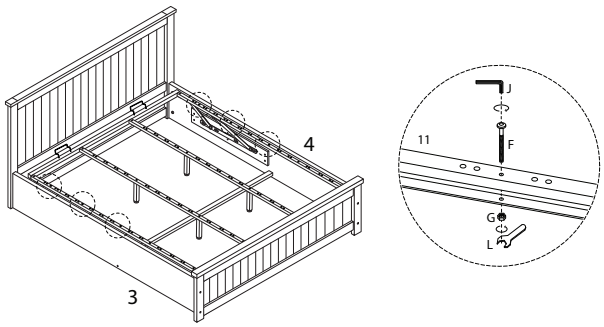

14

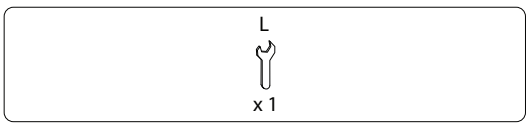

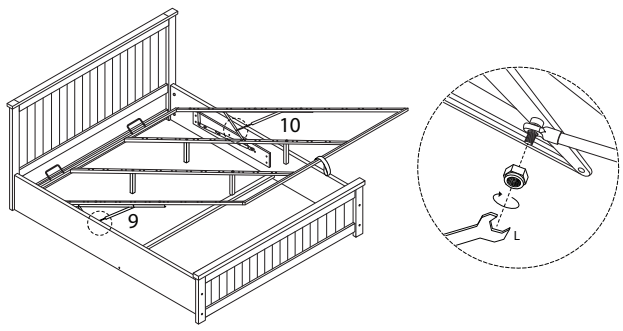

15 x 13

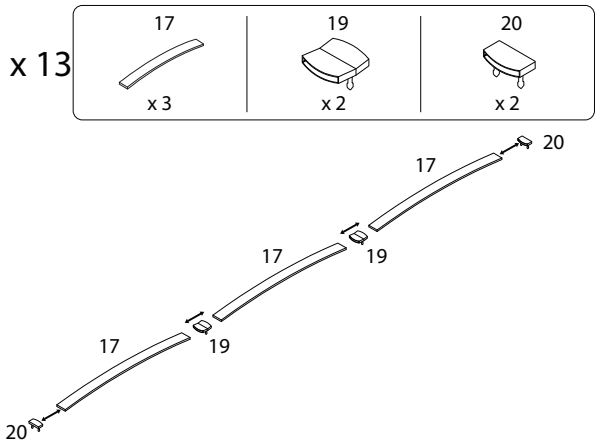

16

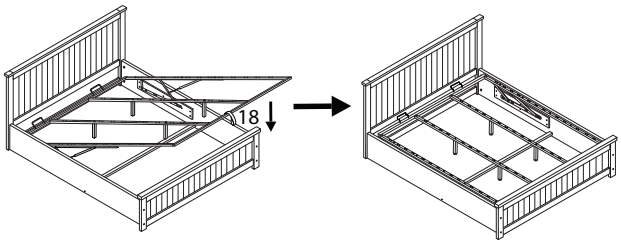

!

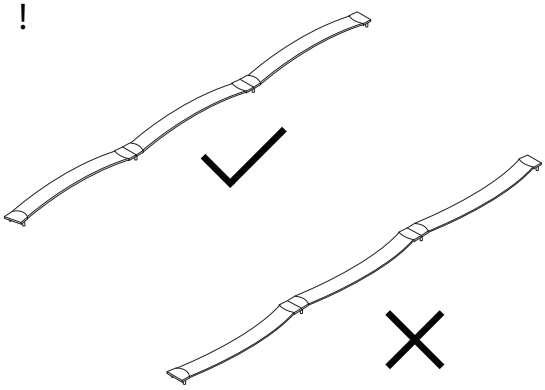

13/15

17

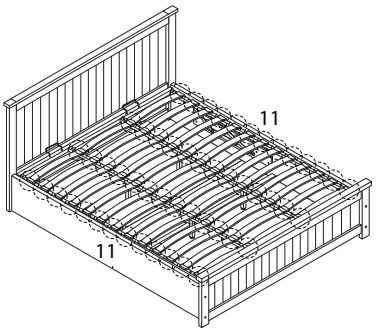

14/15

18

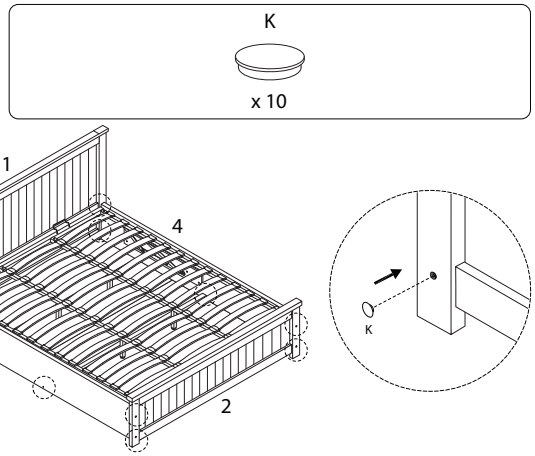

15/15