# EVELYN







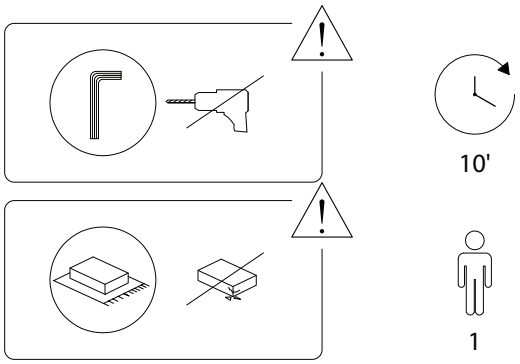






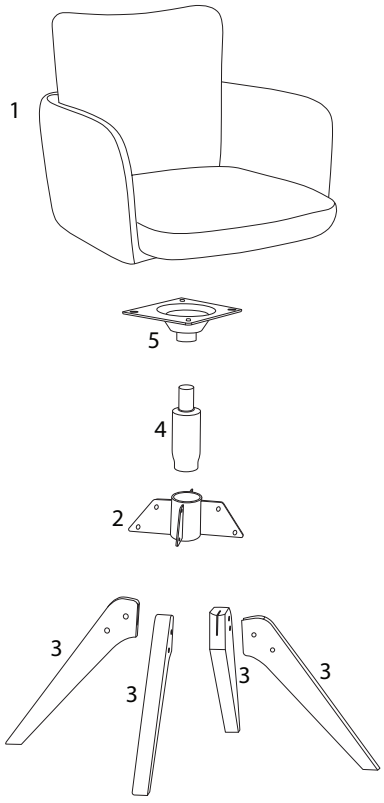






| | |
|---|---|
| 1<br><br>x 1 | 2<br>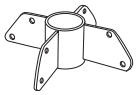<br>x 1 |
| 3<br><br>x 4 | 4<br><br>x 1 |
| 5<br><br>x 1 | 6<br><br>x 4 |

| | | |
|---|---|---|
| A<br><br>x 4 | B<br><br>x 8 | C<br><br>x 8 |
| D<br><br>x 12 | E<br><br>x 2 | F<br><br>x 8 |

!

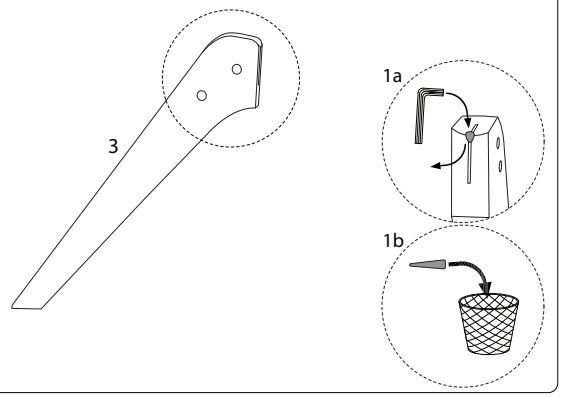
3
1a
1b

2

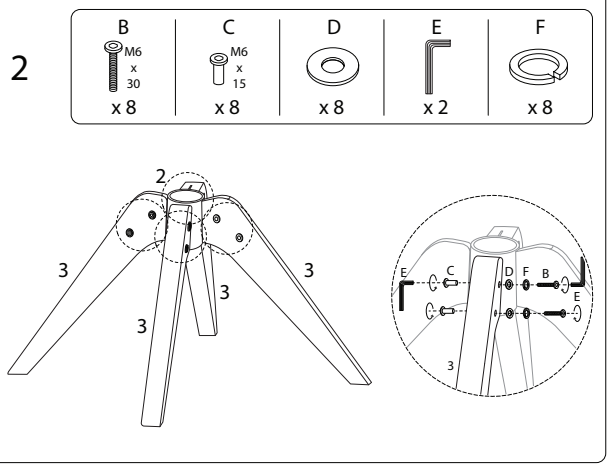
B
M6 x 30
x 8
C
M6 x 15
x 8
D
x 8
E
x 2
F
x 8
2
3
3
3
3
E
C
D
F
B
E
3

1

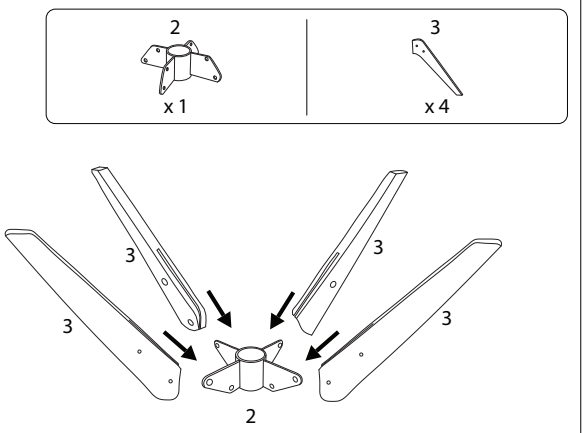
2
x 1
3
x 4
3
3
3
3
2

3

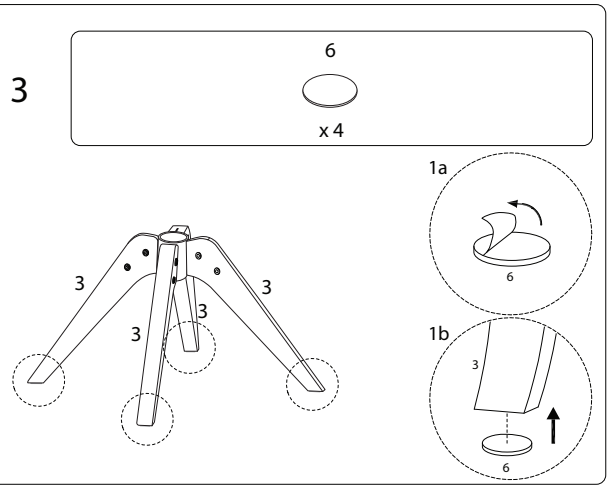
6
x 4
1a
6
3
3
3
3
1b
3
6









4

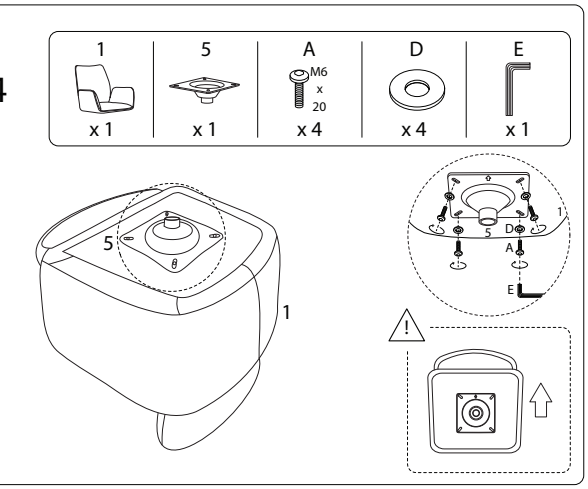
1
x 1
5
x 1
A
M6 x 20
x 4
D
x 4
E
x 1
5
1
1
5
D
A
E
!

6

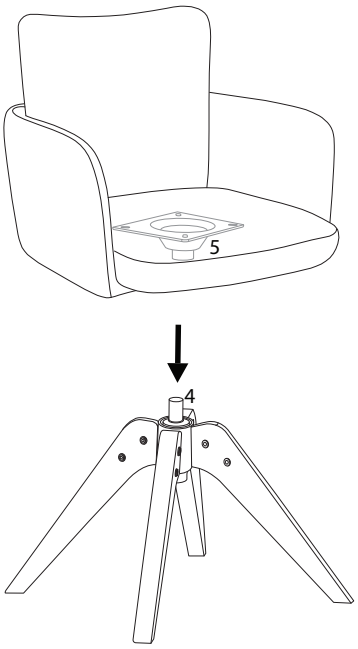
5
4

5

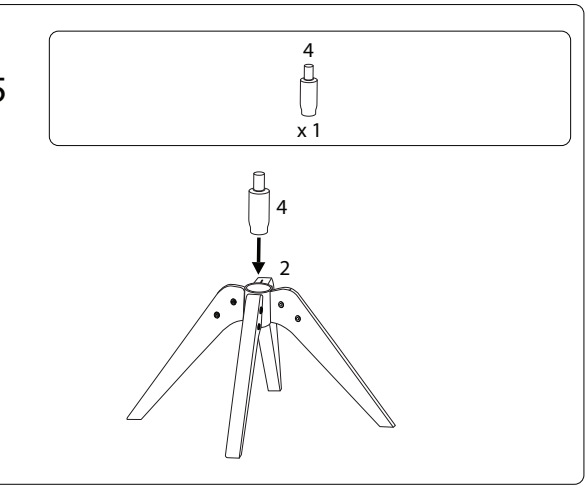
4
x 1
4
2