

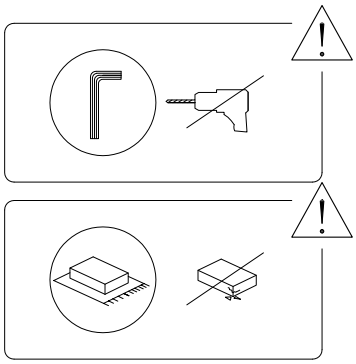


15'


1

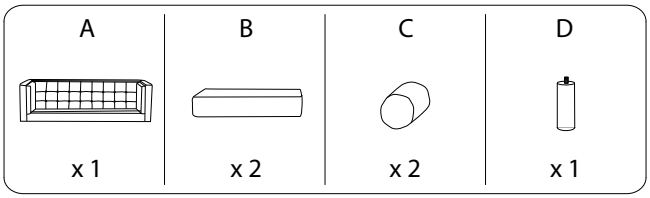
A
x 1
B
x 2
C
x 2
D
x 1

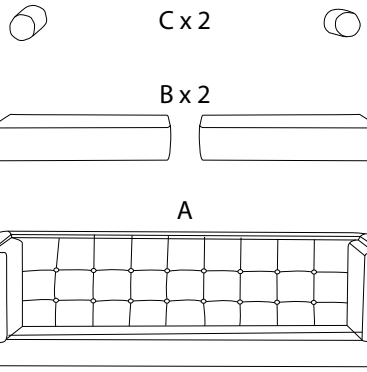
C x 2
B x 2
A

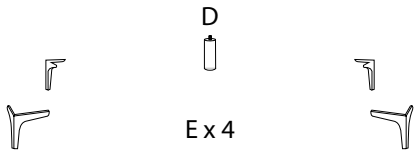
D
E x 4

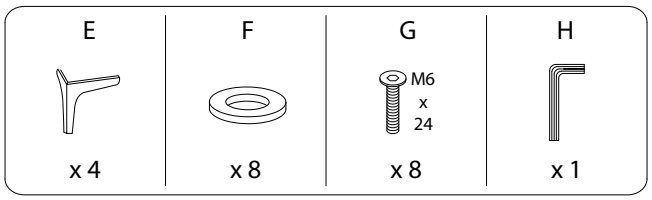
E
x 4
F
x 8
G
M6
x
24
x 8
H
x 1

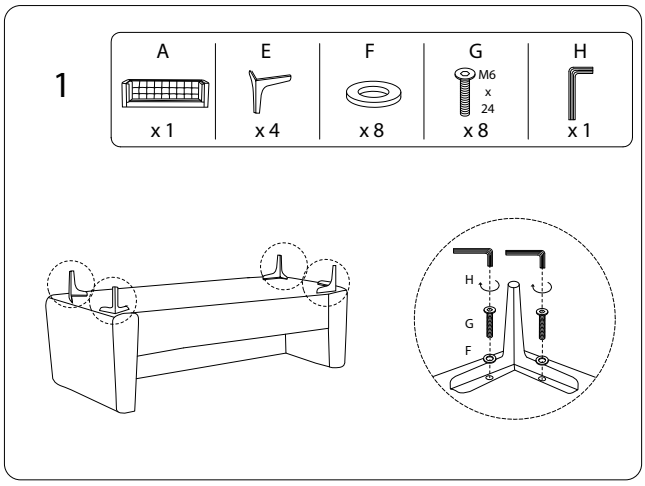
1
A
x 1
E
x 4
F
x 8
G
M6
x
24
x 8
H
x 1
H
G
F

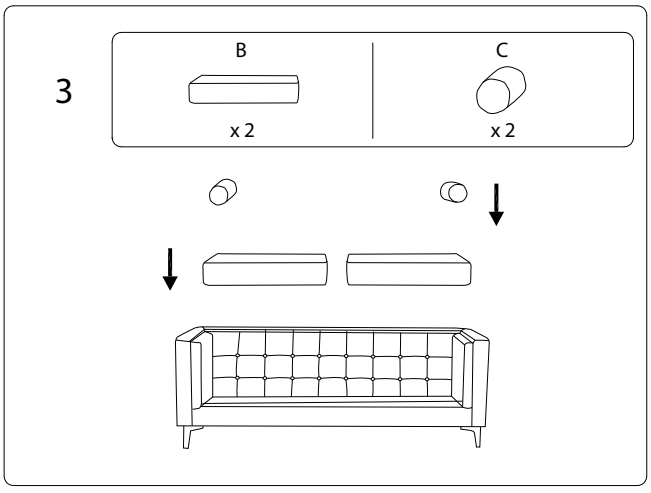
3
B
x 2
C
x 2

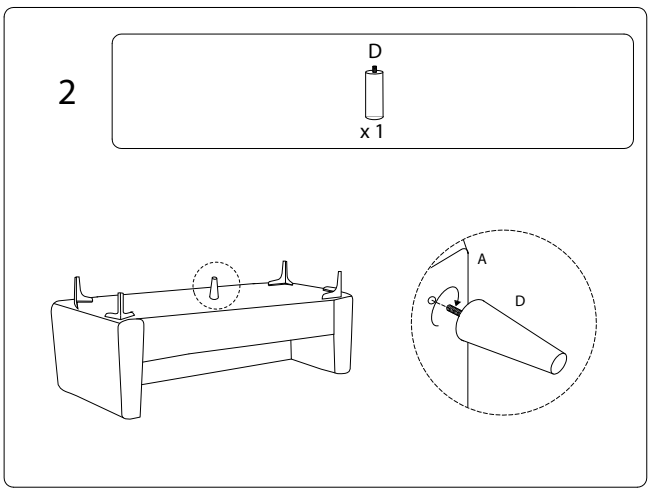
2
D
x 1
A
D