APRICA

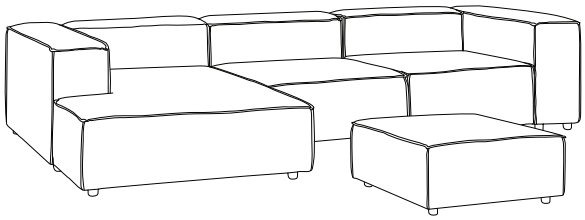

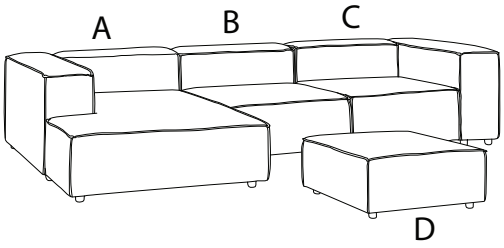
A
B
C
D

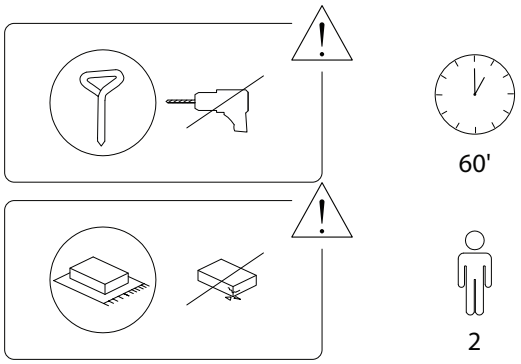
60'
2

A

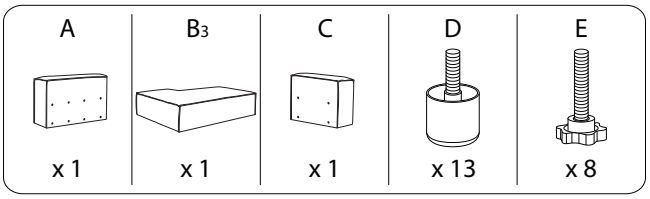
A
B3
C
D
E
x 1
x 1
x 1
x 13
x 8

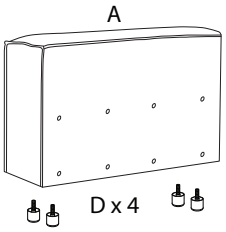
A
D x 4

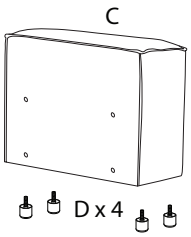
C
D x 4

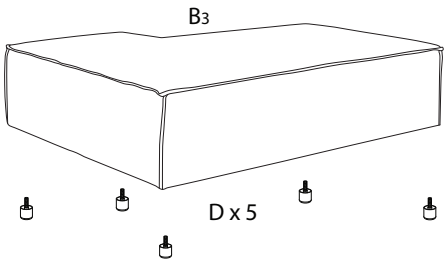
B3
D x 5

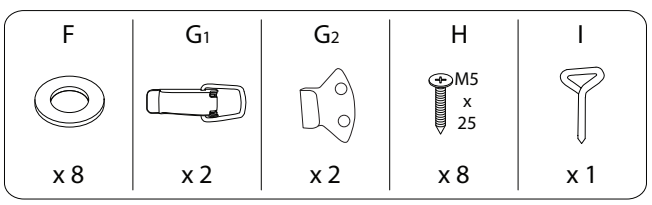
F
G1
G2
H
I
M5
x
25
x 8
x 2
x 2
x 8
x 1

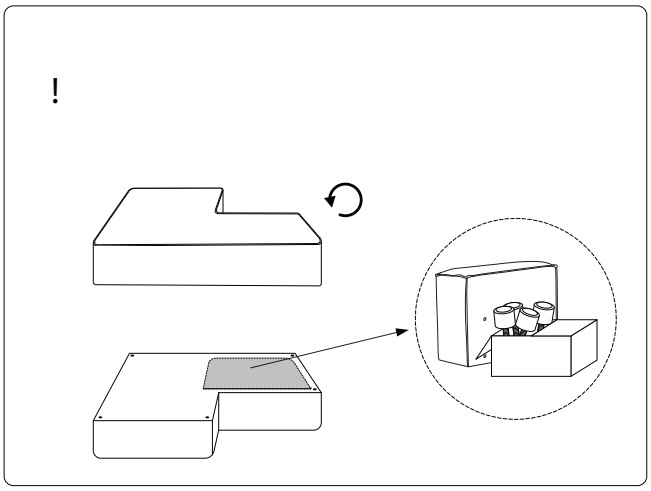
!

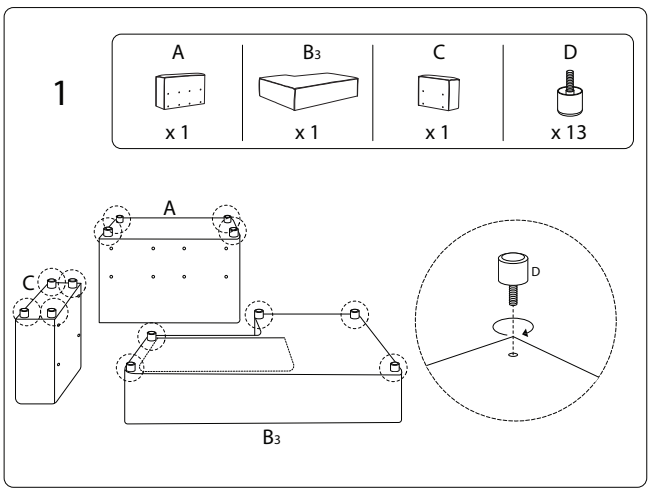
1
A
B3
C
D
x 1
x 1
x 1
x 13
A
C
D
B3

2

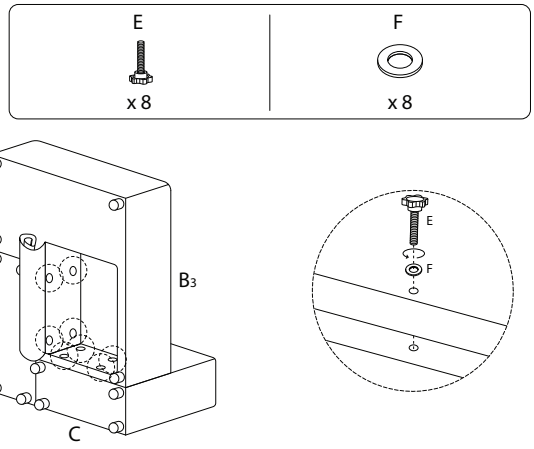
E
x 8
F
x 8
A
B3
C
E
F

3

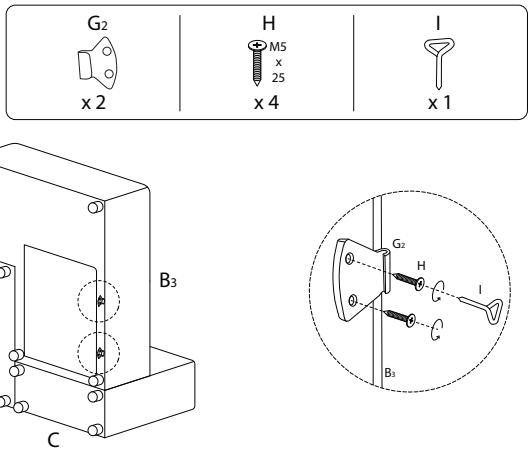
G2
x 2
H
M5
x
25
x 4
I
x 1
A
B3
C
G2
H
I
B3

!

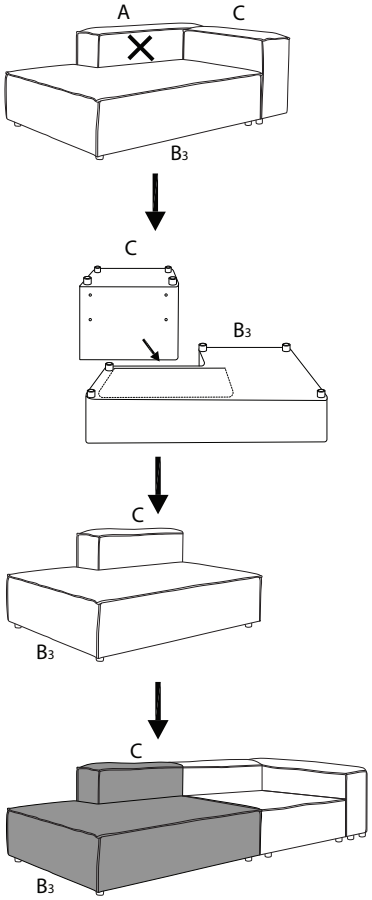
A
C
B3
C
B3
C
B3
C
B3

B

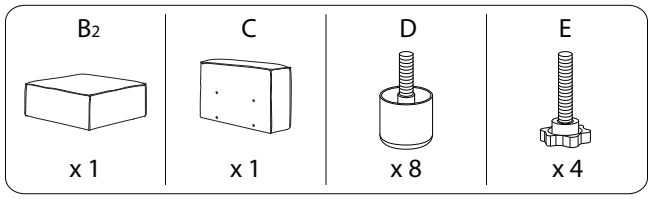
B2
x 1
C
x 1
D
x 8
E
x 4

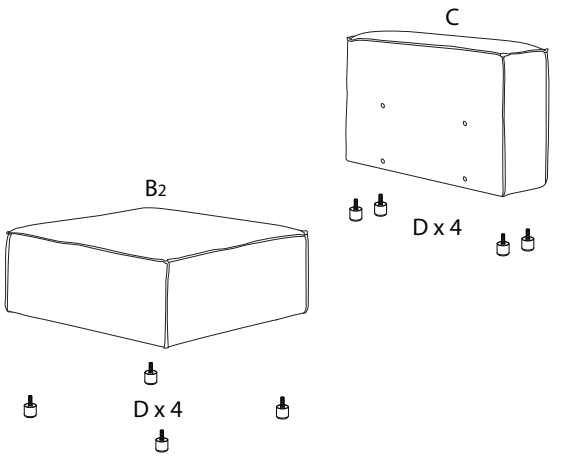
C
D x 4
B2
D x 4

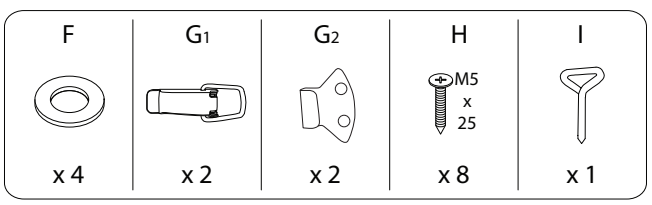
F
x 4
G1
x 2
G2
x 2
H
M5
x
25
x 8
I
x 1

!

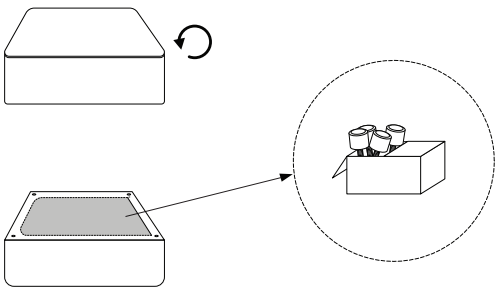

1

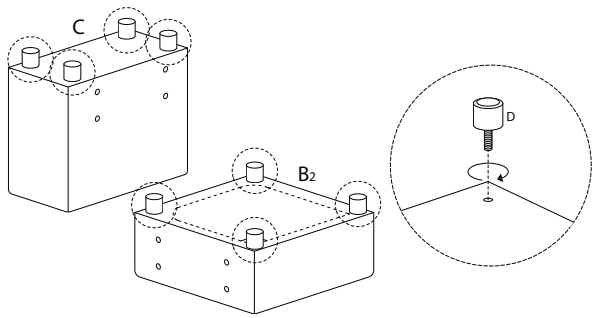
B2
x 1
C
x 1
D
x 8
C
B2
D

2

E	F
x 4	x 4

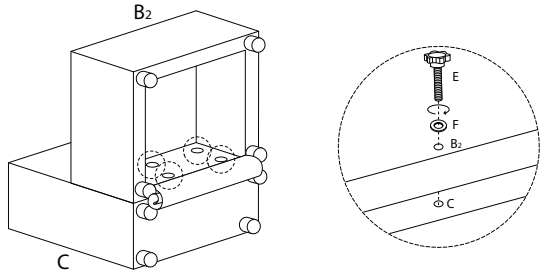

3

G1	G2	H	I
x 2	x 2	M5 x 25 x 8	x 1

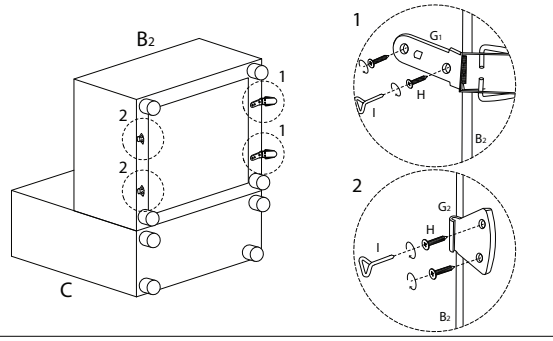

C

A	B1	C	D	E
x 1	x 1	x 1	x 12	x 8

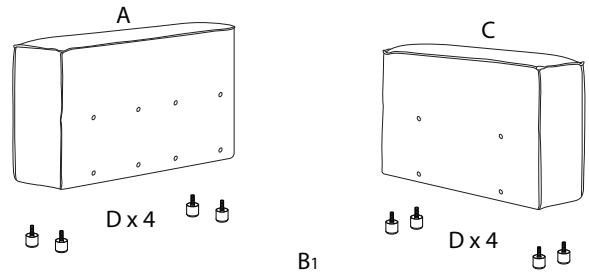

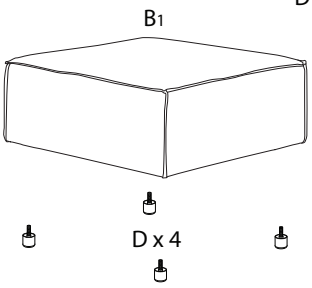

F	G1	G2	H	I
x 8	x 2	x 2	M5 x 25 x 8	x 1

!

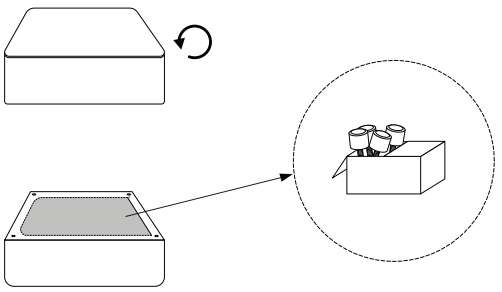

1

A	B3	C	D
x 1	x 1	x 1	x 12

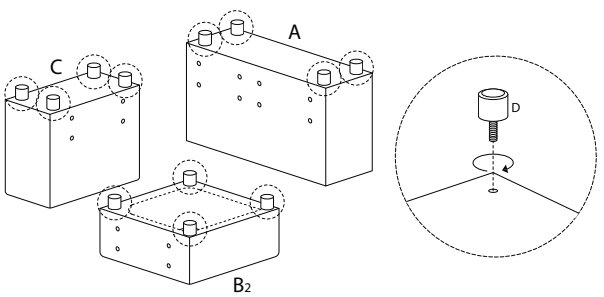

2R

E	F
x 4	x 4

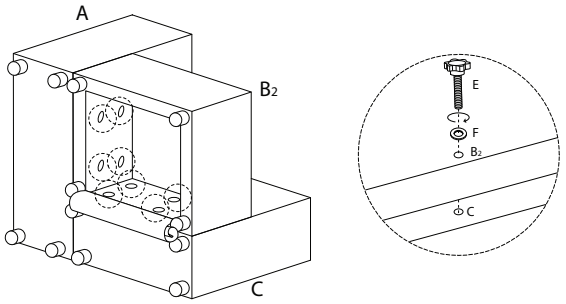

2L

E	F
x 4	x 4

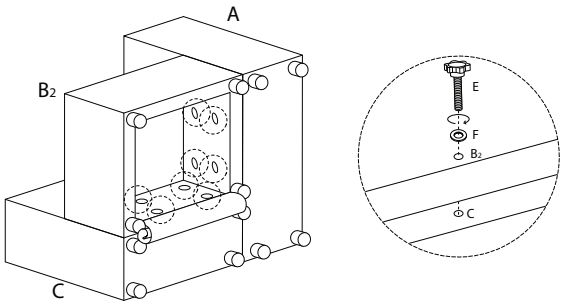

3R

G1	H	I
x 2	M5 x 25 x 4	x 1

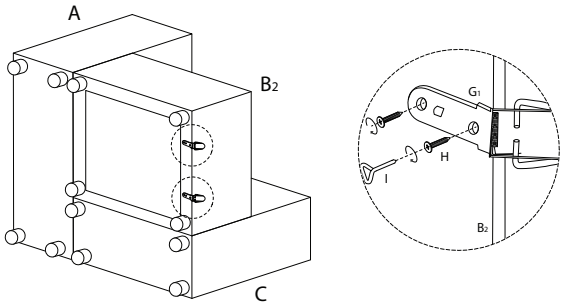

3L

G2	H	I
x 2	M5 x 25 x 4	x 1

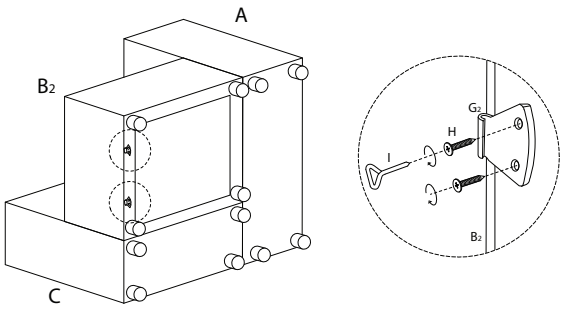

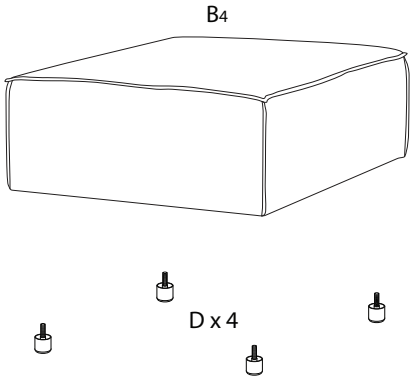

B4	D
x 1	x 4

!

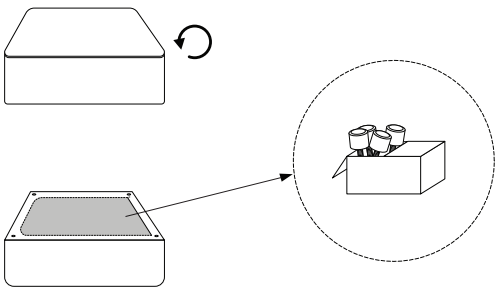

1

B4	D
x 1	x 4

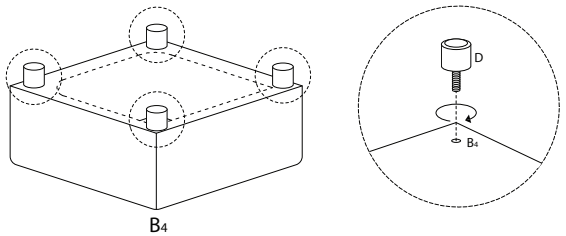

!

