BOLSENA II

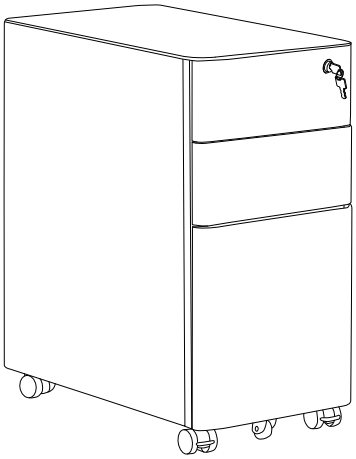

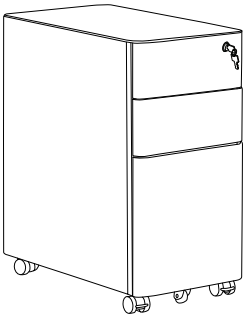

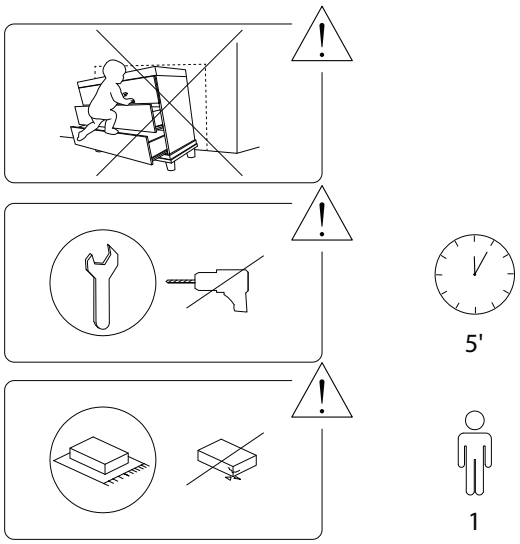

1/3

2123/BOLSENA II/050624/

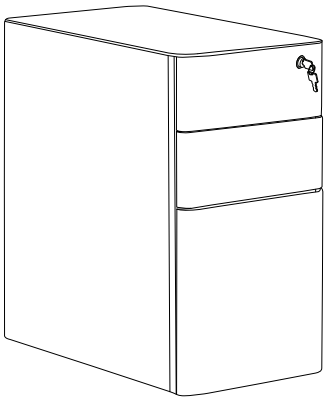

A x 2

B x 2

E

A	B	C	D	E
x 2	x 2	x 4	x 1	x 1

2/3

2123/BOLSENA II/050624/

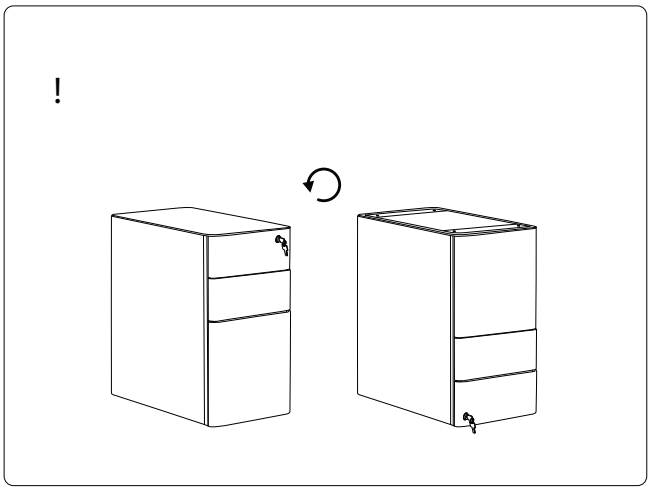

1

A	B	C	D	E
x 2	x 2	x 4	x 1	x 1

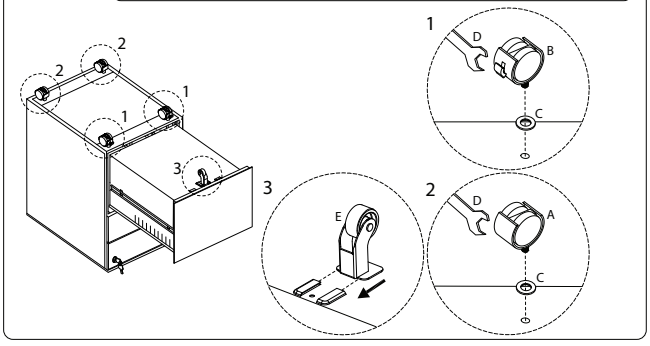

3/3

2123/BOLSENA II/050624/